REFERENCE A 04/22 T 6002 3		**MORANE**
Name of WP/Activity **Sub System Requirements Specification**		**Contract:** TEN 99 **WP/ACT** 04
Company/organisation	**Team**	**MORANE** **WP/ACTIV:** 22

SSRS

20th January 2000

ACCESS : ☐ Public ☑Restricted ☐Confidential

	NAME	DATE	VISA
Author	MORANE	20th January 2000	
Reviewed	MORANE TGLs	20th January 2000	
Approval	R. Sarfati	21st January 2000	

EVOLUTION SHEET

Version	Date	Author	MODIFICATION
A	28/03/1996	WP4/A2	Creation
B	8/05/1996	WP4/A2	Amendments
C	4/06/1996	WP4/A2	Amendments
1	28/06/1996	WP4/A2	Amendments
2	19/03/1997	WP4/A2	Updated version
3	20/01/2000	MORANE	Updated version

This document, property of MORANE, can not be used or duplicated without prior authorisation

TABLE OF CONTENTS

LIST OF ABBREVIATIONS

LIST OF DEFINITIONS

REFERENCES

1. Introduction ***13***

1.1. Aim of the MORANE Project **13**

1.2. Objective and contents of the Sub-System Requirements Specification **13**

1.3. MORANE work programme **14**

2. Logical Model for GSM-R ***15***

2.1. Overall model **15**

2.2. GSM-R Sub-systems **16**

2.3. GSM-R model **18**

3. Interfaces ***20***

3.1. Gateways to other networks **20**

3.2. Application interfaces **20**

4. List of user types and access matrix ***22***

5. Function and Subfunction description. ***23***

5.1. Functional addressing **23**

5.1.1. Introduction 23

5.1.1.1. Definition of terms 23

5.1.1.2. Functional Number translation 25

5.1.1.3. Basic assumptions 26

5.1.2. Calls to train by Train Functional Number 26

Additional assumptions 26

5.1.2.1. Procedures 27

5.1.2.2. Usage 31

5.1.3. Calls to train by Engine Functional Number 33

5.1.3.1. Additional assumptions 33

5.1.3.2. Procedure 33

5.1.3.3. Usage 34

5.1.4. Calls to train by coach number 34

5.1.4.1. Additional assumptions 34

5.1.4.2. Procedures 34

5.1.4.3. Assignment of New functionalities to subsystems 34

5.1.5. Calls to Maintenance Services 34

5.1.5.1. Additional assumptions 34

5.1.5.2. Procedure 35

5.1.5.3. Usage 35

5.1.5.4. Assignment of new functionalities to subsystems 35

5.1.5.5. Calls to train group users 35

5.1.5.6. Calls to shunting groups 35

5.2. Location dependent addressing **36**

5.2.1. Specific Requirements 36

5.2.2. Capability of the GSM System for Routing of MOC 36

5.2.3. Routing of a MOC based on the provided Functional Number 36

This document, property of MORANE, can not be used or duplicated without prior authorisation

5.3. Numbering 39

5.4. Presentation of Functional Numbers to called and calling parties 40
5.4.1. Generalities 40
5.4.2. Mobile Terminals of the GSM-R Network 40
5.4.3. Terminals of Networks external to the GSM-R network 40
5.4.4. Group/Broadcast calls 40
5.4.4.1. GSM Dispatchers 40
5.4.4.2. Originator 41

5.5. Priority calls & acknowledgement 42
5.5.1. Scope 42
5.5.2. Functional Requirements for Priority Calls 42
5.5.2.1. Assignment of the desired priority level of a call by the calling party 42
5.5.2.2. Handling of priorities in the network (fixed network and EIRENE network) 43
5.5.2.3. Indication of the priority level of a call at the destination terminal for point to point calls 43
5.5.3. Functional Requirements for Acknowledgement 44
5.5.3.1. Informing the listening subscribers about the need for the acknowledgement of a call 44
5.5.3.2. Address of the acknowledgement centre 44
5.5.3.3. Telecommunication service used for acknowledgement? 44

5.6. Shunting mode 46
5.6.1. Scope 46
5.6.2. Functional requirements 46
5.6.3. Guidelines for a technical solution 46

5.7. Direct mode 47
5.7.1. Scope 47
5.7.2. Functional Requirements 47
5.7.3. Possible Technical Solutions for Direct Mode 47

5.8. Multiple driver communications on the same train 49
5.8.1. Equipping of Engines with Mobile Terminals 49
5.8.2. Communication Principles 49

5.9. Dispatcher MMI 50
5.9.1. Introduction 50
5.9.2. Required MMI Functions 50
5.9.3. Implementation and Display 50

5.10. Driver MMI 51
5.10.1. Introduction 51
5.10.2. General functions 52
5.10.2.1. Switch MMI on/off 52
5.10.2.2. Select language 52
5.10.2.3. Select mobile radio network 52
5.10.2.4. Adjust loudspeaker volume 53
5.10.2.5. Register and deregister running number 53
5.10.2.6. Register and deregister on-train users 53
5.10.2.7. Service availability indication 53
5.10.2.8. Invoke supplementary services 54
5.10.2.9. Invoke automatic self test 54
5.10.2.10. Adjust display settings 54
5.10.3. Call related functions 54
5.10.3.1. Outgoing calls 54
5.10.3.2. Incoming calls 56
5.10.4. Other call related functions 56
5.10.4.1. Direct mode 56
5.10.4.2. Monitor calls to other on-train users/devices 56
5.10.4.3. Cab radio portable 56

This document, property of MORANE, can not be used or duplicated without prior authorisation

6. Allocation of Function and Subfunction to Subsystems *57*

6.1. Call to a train by train functional number **57**

6.2. Calls to a train by engine functional number **57**

6.3. Calls to a train by coach number **57**

6.4. Calls to Maintenance Services **59**

6.5. Location dependent addressing **59**

6.6. Group/Broadcast calls **60**

6.7. Presentation of functional number **60**

6.8. Priority calls & Acknowledgement related functionalities **61**

6.8.1. Priority calls 61

6.8.2. Acknowledgement 62

6.9. Shunting Mode related functionalities **63**

6.10. Direct mode **63**

6.11. Multiple driver communication **63**

6.12. Cab Radio Functions **64**

6.13. Dispatcher **64**

7. Environmental Specification *65*

7.1. Introduction **65**

7.2. Climatic conditions **66**

7.2.1. Ambient temperature 66

7.2.2. Solar radiation 67

7.2.3. Humidity (relative humidity, absolute humidity, condensation, adsorption, absorption and diffusion) 68

7.2.4. Air pressure and altitude 68

7.2.5. Water and precipitation 70

7.3. Mechanical conditions **71**

7.3.1. Vibrations 71

7.3.2. Shocks 74

7.3.3. Falls 75

7.4. Electrical conditions **75**

7.4.1. Electrical service conditions 75

7.4.1.1. Power supply 75

7.4.1.2. Variations in voltage supply 76

7.4.2. Electromagnetic compatibility 78

7.4.2.1. Electromagnetic disturbances supported by the equipment 78

7.4.2.2. Electromagnetic disturbances generated by the equipment 80

7.5. Material environment **80**

7.5.1. Material damage sources 80

7.5.2. Flammability 81

7.5.3. Design of equipment 81

7.6. Human environment **82**

7.6.1. Battery requirements 82

7.6.2. Additional requirements 83

8. Performance Specification *84*

8.1. Scope of performance specification in MORANE SSRS **84**

This document, property of MORANE, can not be used or duplicated without prior authorisation

8.2. Railway relevant performance aspects 85
8.2.1. Radio link performance 85
8.2.1.1. Railway application aspects concerning radio link performance 85
8.2.1.2. Radio coverage 85
8.2.1.3. Radio traffic estimations 85
8.2.1.4. Railway relevant radio link performance figures 86
8.2.2. End-to-end performance 87
8.2.2.1. Call set-up time 87
8.2.2.2. TCH transmission delay 88
8.2.2.3. Bit error performance in transparent data channels 88

This document, property of MORANE, can not be used or duplicated without prior authorisation

List of abbreviations

A	Availability (A = 1-U)
APP	APPlication
ASCI	Advanced Speech Call Items
ATC	Automatic Train Control
AuC	Authentication Centre
BTS	Base Transceiver Station
BSC	Base Station Controller
BSS	Base Station System
CC	Country Code
CCITT	International Telephone and Telegraph Consultative Committee
CFU	Call Forwarding Unconditional
CI	Cell Identifier
CLIP	Calling Line Identity Presentation
CN	Coach Number
CoLP	Connected Line identification Presentation
CW	Call Waiting
DSD	Driver Safety Device
E.164	CCITT Recommendation (Numbering plan for the ISDN area)
EDSS1	European Digital Subscriber Signalling System
EFC	on Engine Function Code
EFN	Engine Functional Number
EIRENE	European Integrated Railway Radio Enhanced Network
eMLPP	Enhanced Multi-Level Precedence and Pre-emption
EN	Engine Number
ERTMS	European Rail Traffic Management System
ETCS	European Train Control System
ETSI	European Telecommunications Standard Institute
FA	Functional Address
FFN	Follow Me function Node
FFS	For Further Study
FIS	Functional Interface Specification
FIT	Failures In Time [10^{-9}/hour]
FN	Functional Number
FNT	Functional Number Type

This document, property of MORANE, can not be used or duplicated without prior authorisation

GCI Global Cell Identifier

GCR Group Call Register

GPRS General Packet Radio Service

GSM Global System for Mobile Communications

GSM-R GSM Railway

GMSC Gateway MSC

HLR Home Location Register

HOLD Call Hold

IAM Initial Address Message

ID Identity

IEC International Electrotechnical Commission

IMSI International Mobile Subscriber Identity

IN Intelligent Network

IP Index of Protection

ISDN Integrated Service Digital Network

ISUP ISDN User Part

ITU International Telecommunication Union

IWF InterWorking Function

LAC Location Area Code

M Maintainability

MAP Mobile Application Part

ME Mobile Equipment

MLPP Multi Level Precedence and Pre-emption

MMI Man Machine Interface

MOC Mobile Originated Call

MORANE Mobile radio for Railway Networks in Europe

MPTY Multi ParTY

MS Mobile Station

MSC Mobile Switching Centre

MSFN Maintenance Services Functional Number

MSISDN Mobile Station ISDN Number

MSRN Mobile Station Roaming Number

MT Mobile Termination

MTBF Mean Time Between Failure

MTTR Mean Time To Restore

n Number of GSM NE's in a Subnetwork of GSM PLMN

NDC National Destination Code

This document, property of MORANE, can not be used or duplicated without prior authorisation

NE	Network Element (BTS, BSC, MSC, etc., for the GSM PLMN case)
NF	Norme Française (French Standard)
NSS	Network Sub-System
OSI	Open System Interconnection
OSS	Operatiion Sub-System
PABX	Private Automatic Branch eXchange
PLMN	Public (or Private) Land Mobile Network
POTS	Public Old Telecommunication System
PSTN	Public Switched Telephone Network
R	Reliability
RAC	Railway Access Code
RAM	Reliability, Availability and Maintainability
RBC	Radio Block Centre
RLL	Radio in the Local Loop
RAN	Railway Network
RN	Running Number
RSN	Railway Subscriber Number
RST	Radio Sol-Train (Track to train radio)
SA	SubAddress
SAP	Service Access Point
$\mathbf{SAP_F}$	Service Access Point to Fixed applications
$\mathbf{SAP_M}$	Service Access Point to Mobile applications
$\mathbf{SAP_S}$	Service Access Point to Service applications
SC	Short Code
SCP	Service Control Point
SeC	Service Code
SI	Supplementary Information
SIM	Subscriber Identity Module
SMG	Special Mobile Group
SMS	Short Message Service
SMSC	Short Message Service Center
SMS-CB	SMS-Cell Broadcast
SN	Stock Number
SP	Signalling Point
SS	Supplementary Service
SSRS	Sub System Requirement Specification

This document, property of MORANE, can not be used or duplicated without prior authorisation

TA	Terminal Adaptor
TBD	To Be Defined
TCU	TransCoding Unit
TE	Terminal Equipment
TFC	on Train Function Code
TFN	Train Functional Number
TMN	Telecommunications Management Network
TN	Telephone Number
U	Unavailability ($\cong$ MTTR/MTBF = $\frac{1/\mu}{1/\lambda} = \frac{\lambda}{\mu} = \lambda$ MTTR)
$\mathbf{U_{BTS}}$	Unavailability of a BTS
$\mathbf{U_{O/E}}$	Unavailability of an Optical/Electrical Interface
$\mathbf{U_{S,BTS}}$	Unavailability of an Optical/Electrical Interface with BTS station
$\mathbf{U_{S,BSC}}$	Unavailability of an Optical/Electrical Interface with BSC station
$\mathbf{U_{S,MSC}}$	Unavailability of an Optical/Electrical Interface with MSC station
$\mathbf{U_{T}}$	Unavailability of a GSM PLMN
UIC	Union Internationale des Chemins de fer
USSD	Unstructured Supplementary Service Data
UUS1	User to User Signalling
VBS	Voice Broadcast Service
VGCS	Voice Group Call Service
VLR	Visitor Location Register
VMSC	Visited MSC
VPLMN	Visited PLMN
λ=1/MTBF	Failure rate [FIT]
μ=1/ MTTR	Repair rate [1/Hours]

This document, property of MORANE, can not be used or duplicated without prior authorisation

List of definitions

Subsystem

A subsystem is an entity composed of one or more physical equipment to carry out a specific task.

Semi-permanent relationship

A semi-permanent relationship means the following:
(Substitute with the annexed definition) a relationship between an MSISDN number and a functional number whereby the number is seen as a standard MSISDN number by the network and as a functional number by the users.

Group Call

Speech conversation of a predefined group of subscribers in half duplex mode on the radio link into a predefined geographical area

Broadcast Service

Distribution of speech, generated by a service subscriber, into a predefined geographical area to all or a group of service subscribers located in this area

UUS1

End-to-end transfer of user information during call setup or release

FFN

The Follow Me Function Node is a network node in the PLMN of the remote party. It is the node, where the FM data of the remote party are handled. This can be implemented in HLR or any other operator specific network nodes (such as a SCP)

HLR

Home Location Register in which “mobile “ numbers of the mobile terminals (“true” MSISDN numbers) are stored. The HLR node may also be used as the platform on which the Follow Me Function Node may be implemented

IN

Intelligent Network functionality that may be used to perform Follow Me

SCP

Service Control Point, platform on which the Follow Me Function Node may be implemented

All the definitions given in [1] and [2]are applicable.

This document, property of MORANE, can not be used or duplicated without prior authorisation

References

[1] EIRENE Functional Requirements Specification, Version 3.0

[2] EIRENE System Requirements Specification, Version 11.0

[3] **TS-GSM 01.02** European digital cellular telecommunications system (Phase 2)**:** *General description of a GSM Public Land Mobile Network (PLMN)*

[4] **TS-GSM 09.02** European digital cellular telecommunication system (Phase 2)*; Mobile Application Part (MAP) specification*

[5] **TS-GSM 03.68** European digital cellular telecommunications system; *Voice Group Call Service (VGCS) Stage 2*

[6] **TS-GSM 03.69** European digital cellular telecommunications system; Voice *Broadcast Service (VBS) - Stage 2*

[7] Applicability of GPRS to ERTMS, H139001 1

[8] UIC leaflet 751-3

[9] FFFIS for Shunting Mode, I13/2T7001

[10] European Train Control System Specifications

[11] NF F 01-510 (French standard)

[12] ETSI ETS 300 019-1-1 to 019-1-7 (European standards)

[13] MORANE Radio Transmission Test Specification, A 05 T 6001 1

[14] Not applicable

[15] NF F 05-510 (French standard)

[16] EN 55022 (European standard)

[17] IEC 1000-4-8 (European standard)

[18] SNCF, MEP 1 RM 90080 90P156, « Pressure measurements inside the Vouvray tunnel »

[19] EN 60335, -2-29

[20] EN 60529 - Degrees of protection provided by enclosures

[21] UIC leaflet 651

[22] ETSI Tdoc SMG1 117/93 : Quality of Service - new draft of GSM 02.08 (1993)

[23] ETSI ETR 102:193 - GSM 03.05 Technical Performance Objectives

[24] ETSI ETS 300 577 - GSM 05.05 Radio Transmission and Reception

This document, property of MORANE, can not be used or duplicated without prior authorisation

1. Introduction

1.1. Aim of the MORANE Project

The aim of MORANE (Mobile radio for Railway Networks in Europe) is to specify, develop, test and validate prototypes of a new radio system meeting the EIRENE specifications defined by UIC. The system will be based on GSM technology and will meet the global requirements of railways including train control and command.

The standard GSM system should be enhanced in order to meet the following requirements :

- requirements related to operational railway aspects including voice and data communications (e.g. Functional Addressing, Location Dependent Addressing ...),
- requirements related to railway-specific telecommunications aspects : broadcast and group calls, fast call set-up associated with priority and preemption mechanisms,
- requirements related to ERTMS applications.

Services to passengers should be studied within the course of the MORANE project. However, no specification and development tasks are planned within the framework of the DGXIII and DGVII contracts.

Due to the lack of inherent safety of radio links, additional measures external to the radio system must be taken where the applications of the radio communications have significant safety implications.

For communications related to train control and command applications, the radio system must interface to external modules implementing a *safety layer* to ensure fail-safe operation.

For communications related to railway operation, strict operational procedures have to be adopted (e.g. repetition of messages and identities for voice communication).

1.2. Objective and contents of the Sub-System Requirements Specification

This document aims at specifying all the functions which have to be implemented on the GSM equipment in order to fulfill all the requirements identified by the European railways within two documents (ref. **[1]**, **[2]**). It is not intended to present technical solutions unless mandatory or unacceptable.

The contents of the document are as follows:

- to present the logical model for GSM-R and to identify interfaces to other networks,
- to describe all the additional functions/sub-functions which should be supported by the GSM system, i.e. those functions/sub-functions which are beyond the scope of a standard GSM system,
- to allocate these functions to the various types of GSM equipment,
- to specify the performance, environmental and RAM aspects,
- to evaluate the traceability of the SSRS with the EIRENE System Requirements Specification.

This specification has been produced within the framework of the DGVII contract.

This document, property of MORANE, can not be used or duplicated without prior authorisation

1.3. MORANE work programme

MORANE would implement and test on trial sites functions which are mentioned in chapter 6 of this specification. These functions would be rolled out in at least two phases :

- a first phase which deals with the following functions : Functional addressing, location dependent addressing, presentation of functional numbers and confirmation of high priority calls,

- a second phase which deals with the remaining functions.

However, it is not within the scope of MORANE :

- to verify on the trial sites the network architectures meeting the RAM requirements targets for the radio segment,

- to develop prototypes able to meet the environmental requirements specified in chapter 7.

This document, property of MORANE, can not be used or duplicated without prior authorisation

2. Logical Model for GSM-R

2.1. Overall model

The MORANE SSRS only covers the GSM network for railways and a defined set of fixed and mobile applications. Other networks (e.g., railway fixed networks) or applications (e.g., ERTMS) are outside the scope of this specification. However, the applications specify performance and service requirements on those networks. The behaviour of the applications must therefore be defined if the performance requirements are not met or if only subsets of services are provided by other networks.

The structure for the logical model of the MORANE SSRS will follow Figure 2.1.

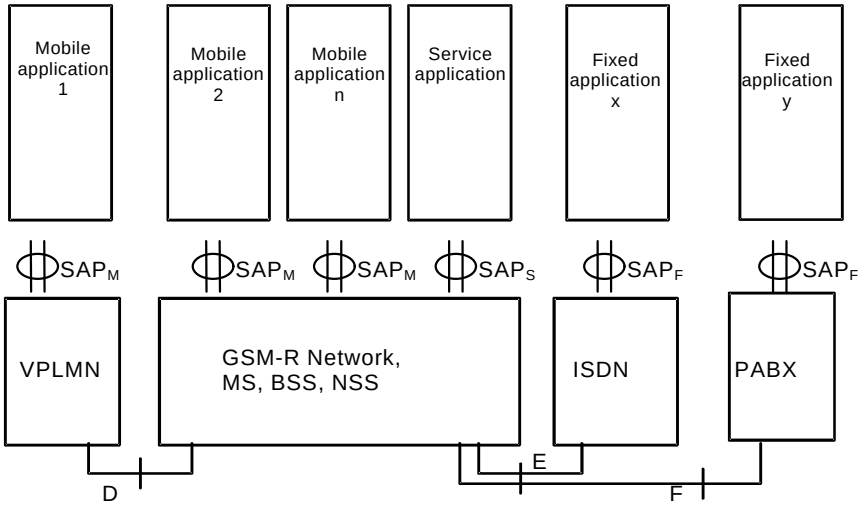

Figure 2.1 Logical Model

Note: D, E and F are defined in the chapter 3.1.

There are several networks that have interfaces to different applications. In principle, the applications can be divided into mobile applications, fixed applications and service applications (FFS).

Only three general interfaces to the application levels should be considered in the context of this specification:

SAP_M - Service Access Point to Mobile applications

SAP_F - Service Access Point to Fixed applications

SAP_S - Service Access Point to Service applications.

This document, property of MORANE, can not be used or duplicated without prior authorisation

2.2. GSM-R Sub-systems

GSM-R is constituted by 5 sub-systems:

The Mobile Station (MS)

The Mobile Station (MS) consists of the physical equipment used by the subscriber to GSM-R, to gain access to the telecommunications services offered. Functionally, it includes a Mobile Termination (MT) and, depending on the services it can support, various types of Terminal Equipment (TE), and combinations of Terminal Equipment (TE) and Terminal Adaptor (TA) functions.

The Subscriber Identity Module card (SIM card)

The Subscriber Identity Module card (SIM card) consists of the physical micro chip insert in the Terminal Equipment (TE). This SIM plug-in consist of a storage (RAM and ROM) and computing capabilities with subscribing information of the final user.

The Base Station Sub-system (BSS)

The Base Station System (BSS) is the physical equipment used to give radio coverage to a determined geographical area consisting of a set of cells, and containing the equipment needed to communicate with MS. Functionally, a BSS is subdivided into a control function carried out by the Base Station Controller (BSC) and a radio transceiver function carried out by one or more Base Transceiver Stations (BTS).

The Network Sub-system (NSS)

The NSS is divided into the following entities:

<u>MSC</u>
The Mobile Switching Centre (MSC) is a switching centre that holds all the switching functions needed for mobiles located in an associated geographical area, called the MSC area.
A Mobile Switching Centre takes into account the mobile nature of its subscribers and manages the necessary radio resources, especially those procedures required to handle and update the location registration and to carry out the handover.
Interworking with other networks (PSTN for example) requires the presence of specific functions associated with the MSC. These are known as the interworking functions (IWF). The IWF's depend on the type of network to which it is to be connected and the type of service desired.

<u>Gateway MSC (GMSC)</u>
An MSC that provides an entry point into the PLMN from another network or service. A gateway MSC is also an Interrogating Node for incoming PLMN calls.

This document, property of MORANE, can not be used or duplicated without prior authorisation

HLR

The Home Location Register (HLR) is a data base used for the management of mobile subscribers. The number of them in a PLMN varies according to the characteristics of the PLMN itself.
Two types of basic information are stored in the HLR :

- Subscriber information
- part of the mobile location information allowing incoming calls to be routed to the MSC to join the mobile.

Any administrative action by the Network Operator on subscriber data is carried out in the HLR.

The Home Location Register stores three identities essential to the system :

- The International Mobile Subscriber Identity (IMSI)
- The Mobile Station ISDN Number
- The VLR address (see following section: VLR).

VLR

The Visitor Location Register (VLR) is the functional unit that dynamically stores subscriber information, such as location area. The VLR maintains the subscriber information of all mobiles that are in its area. When a roaming mobile enters an MSC area, the MSC warns its associated VLR of the situation; the mobile enters a registration procedure during which it is assigned a mobile subscriber roaming number (MSRN) or visited network address. This serves to route incoming calls to that mobile.
The VLR also contains other information needed to handle incoming/outgoing calls. The following information is gathered, by the VLR, during a dialogue with the HLR which is associated with the mobile subscriber:

- The Mobile Station Roaming Number.
- The Temporary Mobile Subscriber Identity, if applicable
- The location area in which the mobile has been registered.
- The Data related to supplementary service parameters.

GCR

The Group Call Register (GCR) is a network function which is used for the registration of group and broadcast calls attributes.
The GCR function is a database function.
The GCR implementation is not specified. It may be realised, for example, as a new network node, in a PABX directly attached to an MSC, inside an MSC or as an HLR. The interface between the GCR function and other functions is not specified in the GSM technical specifications.
The GCR data for specific group and broadcast calls are set at the creation of the call attributes and they can be modified later.

This document, property of MORANE, can not be used or duplicated without prior authorisation

FFN

The Follow Me Function Node (FFN) is a network function that is used to store the FM data related to the remote party on which FM is applied.
The FFN implementation is not specified. It may be realised, for example, on an HLR or on an IN node such as a SCP. The interface between the FFN function and the HLR is specified in the GSM technical specifications for Follow Me.

The Operation Sub-System (OSS)
The Operation Sub-System (OSS) is the functional sub-system used to manage and maintain the GSM-R network and all the elements within it.

2.3. GSM-R model

The logical model for GSM-R is shown in Figure 2.2.
Figure 2.2 shows the functional entities of the system and their logical interconnections.

This document, property of MORANE, can not be used or duplicated without prior authorisation

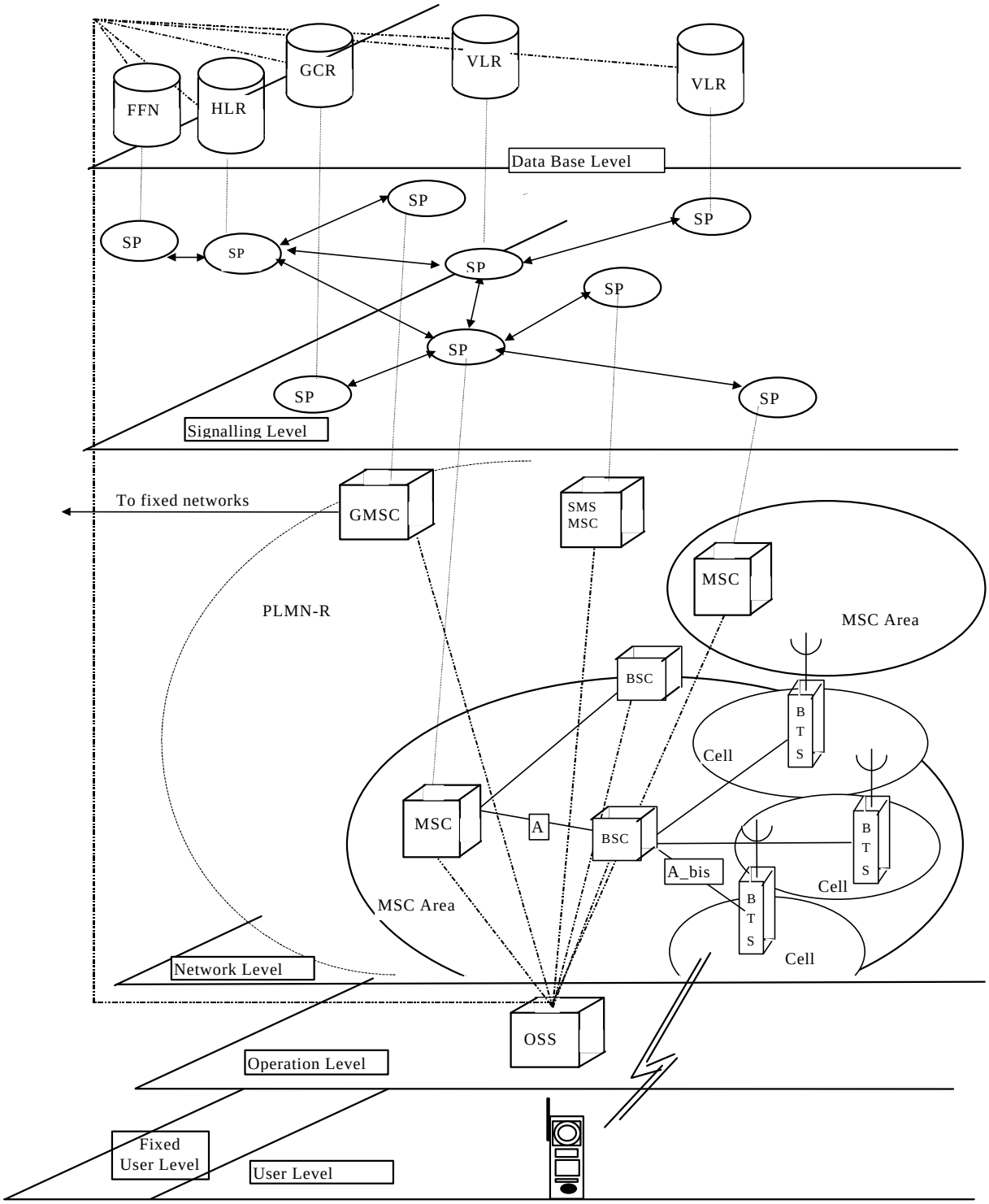

Figure 2.2

The logical model and the definitions are based on several ETSI technical specifications (see ref. **[3]**, **[4]**, **[5]**, **[6]**).

3. Interfaces

3.1. Gateways to other networks

The mobile applications have interfaces to mobile networks such as railway GSM networks or other private or public GSM networks (for these other networks, the term VPLMN is used later in the document). The fixed applications have gateways to fixed railway ISDN networks, other private ISDN networks or public fixed ISDN networks (the term ISDN is later in the document for any network of this type) or direct interfaces to private networks (for which the term PABX is used).

The gateways and interfaces between the different networks are considered to be standard interfaces.

- The interface E between the GSM-R network and ISDN networks will be CCS7-ISUP. (see figure 2.1).
- The interface F between the GSM-R network and a PABX will be EDSS.1 (see figure 2.1).
- The interface D between the GSM-R network and VPLMNs will be CCS7-ISUP and MAP (see figure 2.1).

If networks not supporting these interfaces are connected to the GSM-R network, the necessary protocol adaptation is dependent on these networks and is therefore out of the scope of this specification.

The performance and functions defined in this specification consider networks supporting the gateways and interfaces defined above. Networks performing protocol adaptation will not necessarily fulfil these specifications. Therefore, for each feature of these specifications, degraded performance values and auxiliary mechanisms to replace functions not provided by those networks will be defined if necessary.

3.2. Application interfaces

The MORANE SSRS identifies the interfaces between the applications and the networks at OSI layer 3/4 in order to obtain a supplier independent open system. Detailed definitions of the application interfaces will be provided in the Functional Interface Specification (FIS). The SSRS details the functional requirements of each subsystem.

Functional Interface Specifications shall allow:

- different types of terminal equipment to use the same standard interface;
- separate evolution of application and network equipment technologies and configurations;

The signalling protocols on the Interfaces may be specified using the concepts of the reference model of Open System Interconnection (OSI) given in ITU-T Recommendations X.200 and X.210.

The primitives that are exchanged between layer 3 and layer 4 are of the following four types. (see figure 3.1)

This document, property of MORANE, can not be used or duplicated without prior authorisation

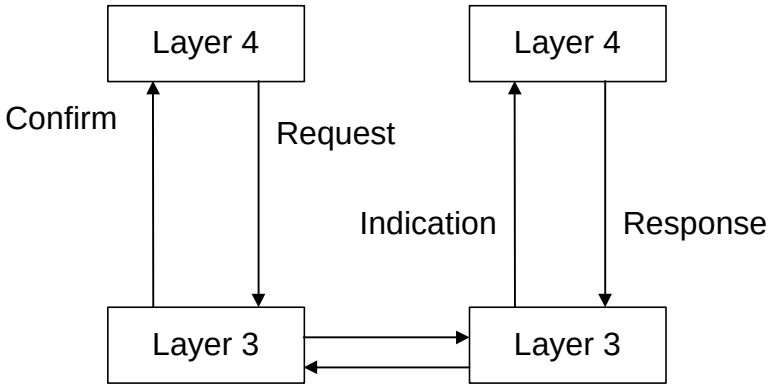

Figure 3.1

For the FIS it is necessary to define in detail the service primitives to be exchanged between the layer 4 entities of the application and the entities of layer 3.

Three kinds of interfaces are identified for the application part:

- to mobile application SAP_M
- to fixed application SAP_F
- to service application SAP_S (FFS)

Only two application interfaces - SAP_M and SAP_F - are considered throughout the interface specification. All adaptations to meet special applications are a matter for the application specification. For example, the transmission adaptation of EURORADIO for the application ERTMS is a matter for the ERTMS specification. The specification of SAP_M and SAP_F shall be independent of the application specifications.

SAP_M and SAP_F are defined in a general way. The description should be independent of the different applications that are using the interfaces.

For every application the related application specification shall identify the subset of functions that are used.

This document, property of MORANE, can not be used or duplicated without prior authorisation

4. List of user types and access matrix

This chapter will represent the requirements stated in [1] [2] as soon as they have been internally accepted within ERIG.

This document, property of MORANE, can not be used or duplicated without prior authorisation

5. Function and Subfunction description.

5.1. Functional addressing

Functional addressing is a variant of the Follow Me features as described in ETSI specifications [35] and [36].

5.1.1. Introduction

Functional Numbers identify both functions and applications. From a logical point of view, the EIRENE system can be seen as a set of applications/functions running over a number of communication links. Every application/function makes use of a basic telecommunication service (bearer service or teleservice). One physical termination can be either a mobile terminal or a sub-port of a mobile terminal. A Functional Number identifies the user's function rather than the number of the user's terminal; for instance, a certain functional number identifies the driver of a certain train and not the number of the phone of the cab radio installed in the locomotive.

In this way, if during the journey the locomotive is changed, the train functional number is always the same.

This feature guarantees the independence of the number known to the user from those changes made in space and time to the physical terminal.

The EIRENE network users can originate and receive calls by functional numbers.

5.1.1.1. Definition of terms

Within the Eirene network, several types of numbers can be identified:

- **Telephone Number** (TN): is a number that can be employed by users of a telecommunication network to identify a specific user/function. The relationship between number and subscriber is semi-permanent.

MSISDN Number (Mobile Station (IS) Directory Number) is the number of the mobile terminal that identifies the mobile set. The MSISDN Number is an E164 compliant Telephone Number following a standard numbering plan for ISDN numbers that are of the format CC + NDC + SN. The number is at most 15 digits in length.

The MSISDN Numbers are stored in HLR. There could be several HLR in the Eirene network and each MSISDN is stored in one of them.

- **Functional Address** (FA): is an alphanumerical address that identifies an end user/function.

- **FM service supervisor**: the mobile subscribers who are allowed to modify the Follow Me data of the remote party who has been registered to another initiating subscriber for the Follow Me application. The FM service supervisors shall be authorised by the network operator.

- **Functional Number** (FN): is the full number used (within the functional numbering scheme) to identify an end user or system by function or role, rather than by a specific item of radio equipment or

This document, property of MORANE, can not be used or duplicated without prior authorisation

user subscription. The functional number is also known as a “dummy” or “virtual” Number and shall **not** contain alphabetical characters. Functional Numbers are stored in one or more FFN. There is no restriction in having both MSISDN and Functional numbers within the same physical HLR, i.e. when the HLR and the FFN are collocated as part of a HLR implementation of the network.

The association between functional numbers and MSISDN numbers is set up during the Registration Operation and removed during the Deregistration Operation. To prevent the inadvertently blocking of a functional number by a MS which has not deregistered, the forced deregistration operation of FN permits deregistration of a FN by a different MS. These operations are normally under subscriber control and they are repeated whenever the association requires modification.

When used, a translation is performed (call by call) from the functional to mobile “true” number.

- **Functional Number Type** (FNT): is a number indicating the type of the Functional Number.

- **Running Number** (RN): is an identity given to a train by operational staff for the duration of a particular journey.

- **On Train Function Code** (TFC): is a number which identifies unequivocally a function or user on a train.

- **Train Functional Number** (TFN): is a Functional Number identifying unequivocally a user/function on a given train. It is made up of the following:

Functional Number Type + Running Number + On Train Function Code.

- **Stock Number** (SN): is a permanent identity assigned to an item of rolling or traction stock. According to Leaflet UIC 438-1, it is up to 12 digits long.

- **Engine Number** (EN): according to Leaflet UIC 438-3, this is the “number of the powered unit allocated by each railway. It is made up of 6 (out of 12) digits of the Stock Number.

- **On Engine Function Code** (EFC): is a number that identifies unequivocally a function or user on an engine.

- **Engine Functional Number** (EFN): is a Functional Number identifying unequivocally a user/function on an engine. It is made up of the following:
  Functional Number Type + Engine Number + On Engine Function Code.

- **Maintenance services Functional Number** (MSFN): is a Functional Number identifying unequivocally a maintenance services personnel. It is made up of the following:
  Functional Number Type + working Location +Team type + Member identity + Team number.

- **Coach Number** (CN): according to Leaflet UIC 438-1, it is the “actual vehicle number” composed of 2 digits identifying the operating characteristics + 2 digits identifying certain technical characteristics + 3 digits identifying the serial number. The Functional Number Type + the Coach Number is an example of an MSISDN functionally structured number.

This document, property of MORANE, can not be used or duplicated without prior authorisation

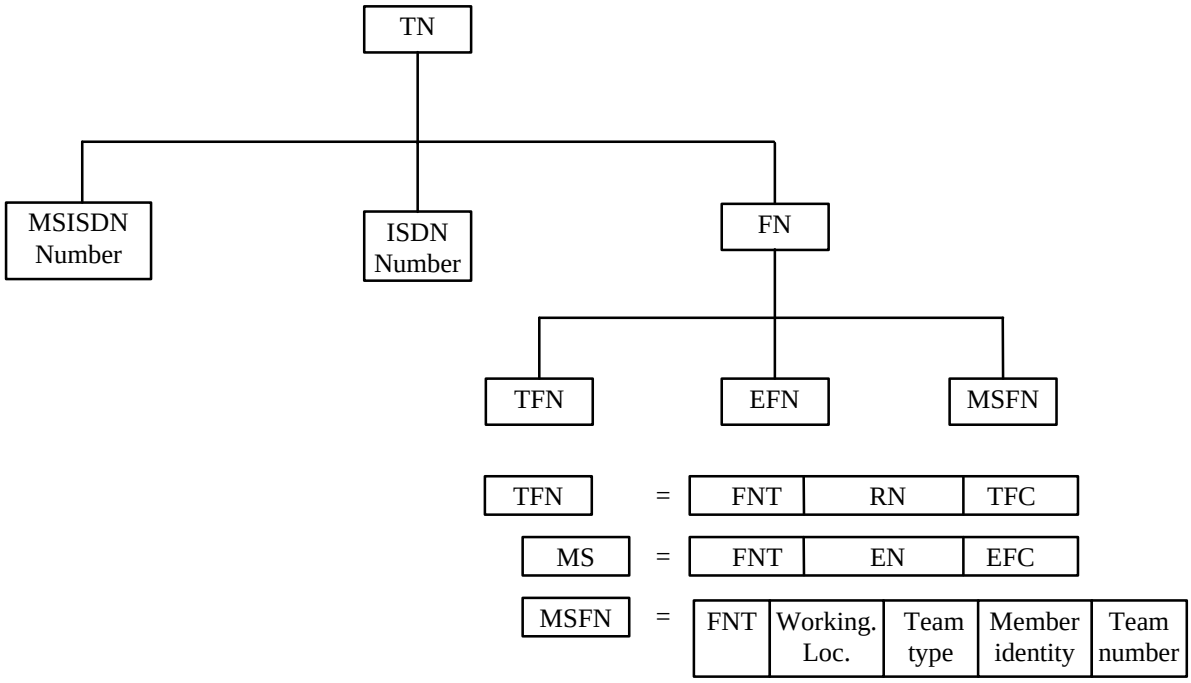

Figure 5.1.1 Hierarchical model

5.1.1.2. Functional Number translation

In order to provide Functional Number translation, a Follow Me approach is used. Every Functional Number is seen like a “dummy” or “virtual” number which has a call forwarding active towards the mobile terminal where the function/application resides. Procedures for handling (e.g., setting up, removing, updating, etc.) the relationship between Functional Number and MSISDN Number are defined in the FM specifications [36].

This document, property of MORANE, can not be used or duplicated without prior authorisation

5.1.1.3. Basic assumptions

The following assumptions are made:

1) For every function reachable using the functional addressing scheme, a Functional Number is assigned.
2) The HLR, contains for every IMSI, only one MSISDN number for all services subscribed by one mobile user. (single numbering scheme)
3) Functional numbers to be used in a network shall be predefined in the FFN of this network
4) The content of Sub-Address field is standardised in [2]

5.1.2. Calls to train by Train Functional Number

Additional assumptions

In addition to the Basic Assumptions, the following assumptions are made:

1) Within one network at a given point in time, a given running number can be allocated to one and only one train. Railways need to ensure the uniformity of running numbers by applying appropriate procedures.

2) Every on train function is identified by a standard code (the On Train Function Code) and it is associated with either one Basic Service or with a set of Basic Services.

3) Every function associated with a set of Basic Services has a related default Basic Service.

4) Each GSM-R network assumes that Train Functional Numbers are own Train Functional Numbers (i.e. domestic Train Functional Numbers), as described in its FFN, except where the number is preceded by the RAC of another Railway. This implies that the International Train Functional Numbers are managed as domestic Train Functional Numbers. (For example, if an international train travels in countries A and B where it is identified by *xyz* running number, then its Train Functional Numbers will be described, in both FFN_A and FFN_B, as a domestic subscriber). This allows (in the originating country) the start of a new train having the same train number and a different engine, whilst the previous train is still running in another country.

5) All the Train Functional Numbers, associated to functions located on the same train, are stored on the same FFN.

This document, property of MORANE, can not be used or duplicated without prior authorisation

6) During the train's journey, registration or deregistration of on-train functions can be performed

7) During its journey, a train may have different running numbers or may change its engine number may change

5.1.2.1. Procedures

In order to handle Follow Me, the following user procedures, only available to the MS are possible:

- Follow Me registration -- for setting up a relationship between functional numbers and MSISDN number(s)
- Follow Me deregistration -- for deleting a relationship previously set up (including FM supervisor forced deregistration)
- Follow Me update -- for updating the Follow Me registration information in the FFN when for instance a train crosses a railway border
- Follow Me interrogate -- for interrogating a specific functional number to obtain the MSISDN number associated with it.

The Follow Me subscription is provided for all the procedures, refer to ETSI FM specification [35] for subscription and provision information.

The Follow me procedure Subscription data are stored in the Mobile user data (i.e., in the HLR). They are not stored in the Follow me function node (FFN). Refer to the ETSI FM specification [36] for the information stored in the HLR and FFN.

5.1.2.1.1. Follow Me Registration

The Follow Me Registration procedure sets up a temporarily relationship between functional number(s) and MSISDN number(s).

Note: In the following text, the Follow Me Registration Procedure may also be referred to as "Registration".

Registration shall be possible, both before the start and during the train journey. This enables the adding of new functions during the train journey.

The cab radio must register every on-train function supported by itself. The On Train Function Code will be included in the follow me registration procedure.

If the train is equipped with more than one mobile terminal, the follow me registration procedure must be activated by the user of each mobile (MSISDN) with different FNs.

The following railway specific data is to be provided by each terminal as part of the normal FM procedure as defined in [36], when registration is invoked :

- The Railway Access Code
- The Functional Number, including Type and Function Code when required.

This document, property of MORANE, can not be used or duplicated without prior authorisation

In the most general case, different functions (on the same train) will be located on mobiles from different countries, which may also be different from the country through which the train is running. As a result, the registration of all the users will define a set of links between one FFN and a set of HLR spread throughout different countries.

When the Registration procedure is invoked, the Network will perform the FM procedures as described in [36].

The result of the registration procedure will be sent back to the mobile. In the event of a failure, a cause will be provided.

The FN must be registered and interrogated by different users and therefore password protection is not feasible.

Editor's note: diagram updated with HLR, FFN and remote party, Follow Me feature

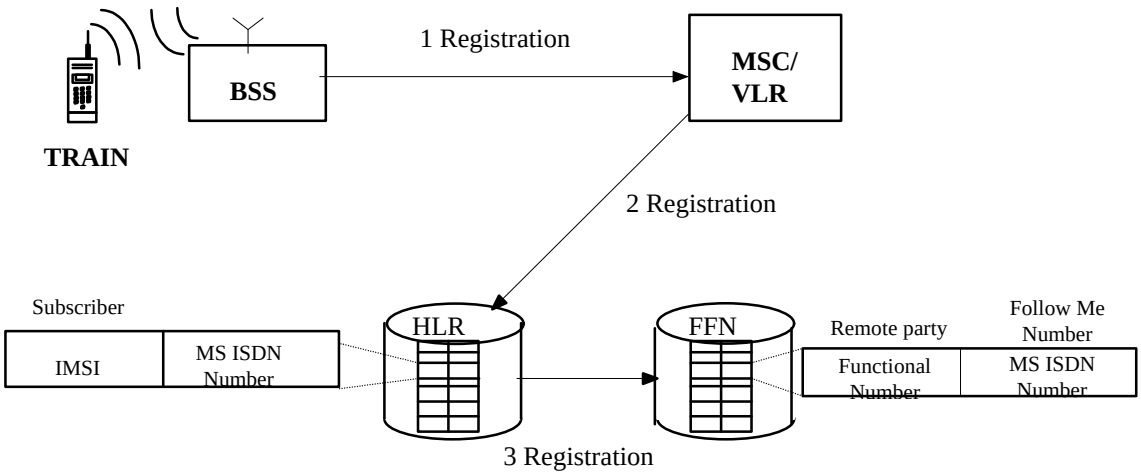

Figure 5.1.5 Registration Procedure

5.1.2.1.2. Follow Me Deregistration

The Follow Me Deregistration procedure will remove the association between the Functional Number and MSISDN number

Note: In the following text, the Follow Me Deregistration Procedure may also be indicated as "Deregistration".

In general, an association may be removed, only if the deregistration is requested by the same mobile (MSISDN) that had previously set up the registration or an authorised FM service supervisor.

Deregistration shall be possible, both before the start and during the train journey. This enables the removing of functions during the train journey.

The following railway specific data is to be provided by each terminal as part of the normal FM procedure as defined in [36], when deregistration is invoked:

- The Railway Access Code
- The Functional Number, including Type and Function Code when required.

When the deregistration procedure is invoked, the Network will perform the FM procedures as described in [36].

The result of the de registration procedure will be sent back to the mobile. In the event of a failure, a cause will be provided.

The FN must be registered and interrogated by different users and therefore password protection is not feasible.

Editor's note: diagram updated with HLR, FFN and remote party, Follow Me feature

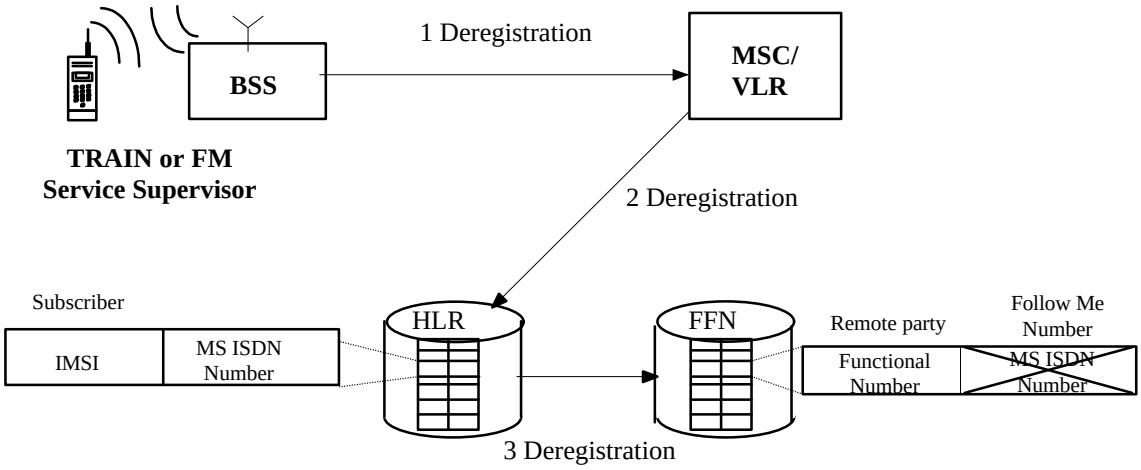

Figure 5.1.6 Deregistration Procedure

5.1.2.1.3. Follow Me Update

It is assumed, that every Running Number is handled by every Railway as its own Running Number. In the case of an international train, it will require an update, to create the FM on the FFN in the country that the train is entering. Conversely, it is necessary to remove the FM from the FFN in the country that the train is leaving.
The removal of the FM is not really necessary for the addressing, but if performed, it will allow the originating Country to start a new train with the same Running Number and a different engine, even if the previous train is still running in another country.
It is recommended to remove the FM on the old FFN after the registration on the new FFN.

The following approaches are possible:

1) Every mobile user manually Registers and Deregisters himself again, on entering the new country.

2) An application on a mobile carries out the Registration procedure and Deregistration procedure.

Both approaches do not require new procedures to be defined between mobile and network.
Editor's note: diagram updated with HLR, FFN and remote party, Follow Me feature

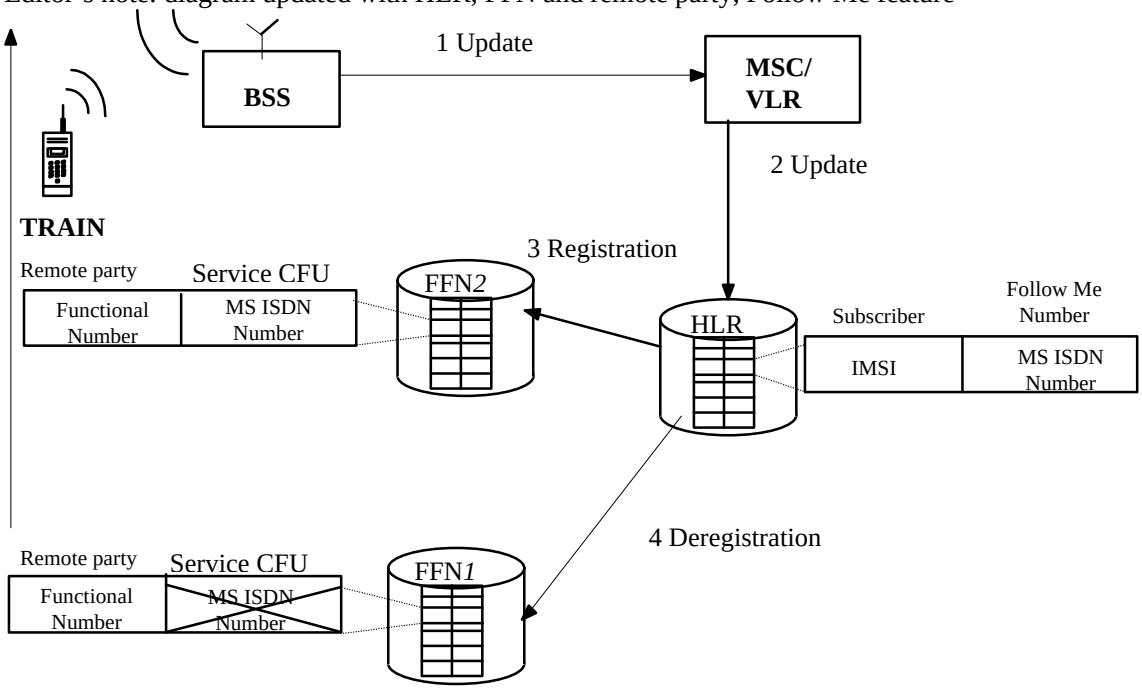

5.1.2.2.4 -Follow Me Interrogation

The Follow Me Interrogation procedure is used to obtain information on the Follow Me service which is linked to a Functional Number.

This document, property of MORANE, can not be used or duplicated without prior authorisation

Note: In the following text the Follow Me Interrogation Procedure may also be described as "Interrogation".
The User can ask for Follow Me related information which is stored in the FFN. .
The response of the Interrogation procedure will contain the MSISDN number "forwarded_to_number", associated with the FN.
Interrogation will always be possible.

The following railway specific data is to be provided by each terminal as part of the normal FM procedure as defined in [36], when interrogation is invoked:

- The Railway Access Code
- The Functional Number, including Type and Function Code when required.

When the interrogation procedure is invoked, the Network will perform the FM procedures as described in [36].

The result of the de interrogation procedure will be sent back to the mobile. In the event of a failure, a cause will be provided.

Editor's note: diagram updated with HLR, FFN and remote party, Follow Me feature.

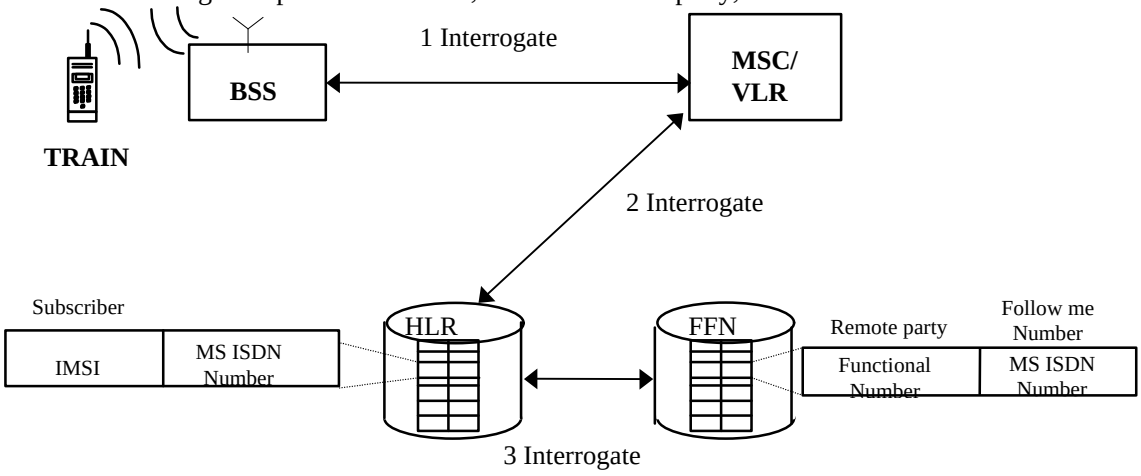

Figure 5.1.8 Interrogation Procedure

5.1.2.2. Usage

As the on train function may be provided by a sub-port of a Mobile, it is mandatory, to send the function related Sub-Address to the mobile. The Sub-Addresses have to be derived from the Train Functional Number in the FFN.
In the case of a Non-ISDN, Single Numbering Scheme Terminating Call, the network will determine the service which is offered to the mobile. This action is performed in the VMSC by using the standardised relationships between Sub-Addresses, Function Codes and (default) Services.
An example of the addressing to a train is shown in the following figure.

This document, property of MORANE, can not be used or duplicated without prior authorisation

Procedure in GMSC1

No impacts but for reducing the call set-up time, it is important to guarantee that no subsequent steps of routing are necessary.

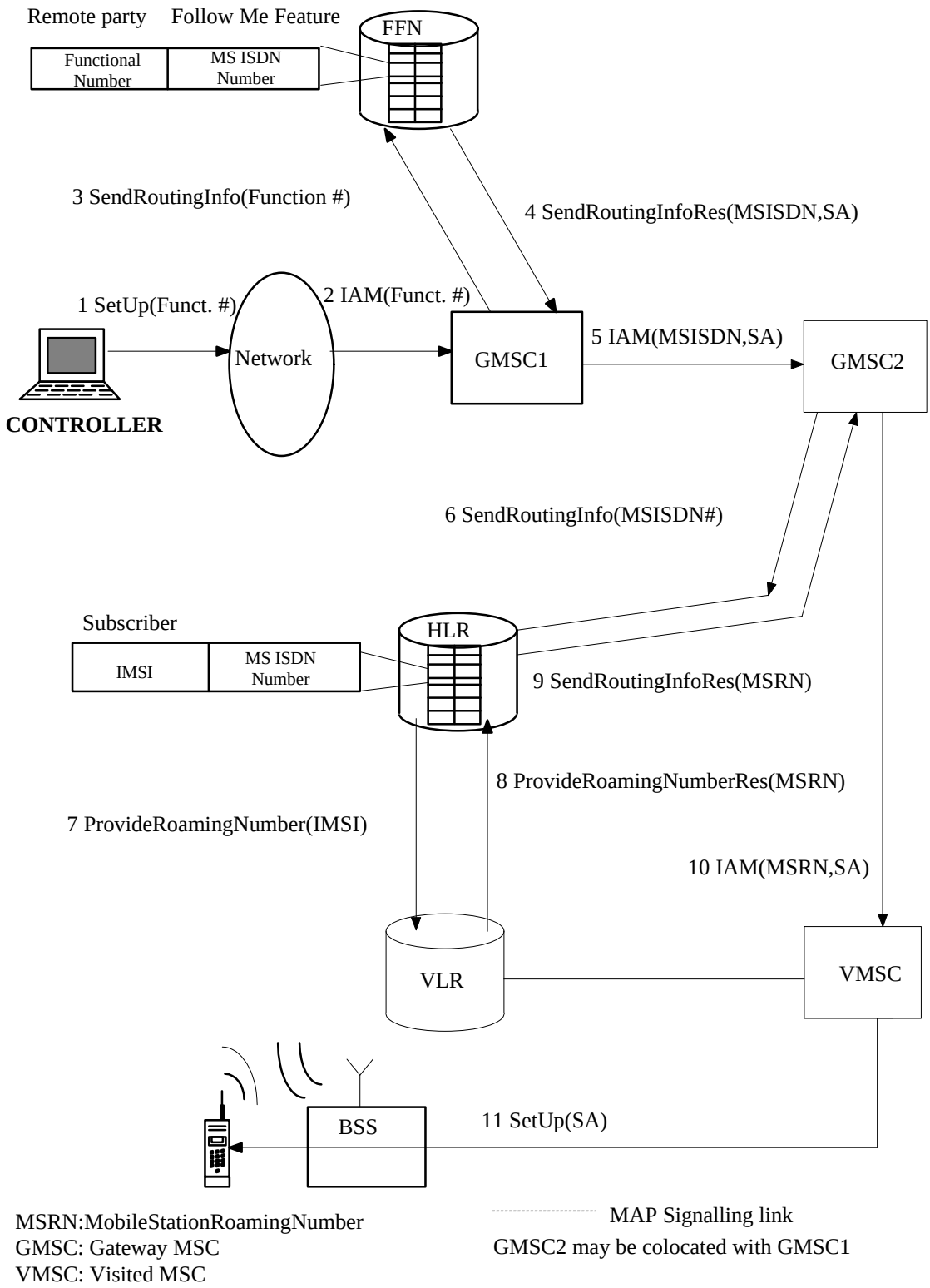

Figure 5.1.9 Usage

5.1.3. Calls to train by Engine Functional Number

5.1.3.1. Additional assumptions

The Engine Number is used in place of the Running Number to access on-train users when no Train Functional Number has yet been registered, because there is no train. It can be also used when a train is equipped (for a limited part of the journey) with multiple, active traction vehicles. In this case, if the additional locomotives' drivers do not perform the registration procedure on the running number of the train, they can be called via the Engine Functional Number (provided the corresponding on-engine functions have been registered for this engine number).

In the case of calls using the Engine Functional Numbers only, a subset of on-train users (those on the engine) may be selected.

This can simplify the procedures because, if all the reachable users are not using handportables, it is possible to perform the registration at the time of provisioning (semipermanent data) and not under the subscriber's control.

In addition to the Basic Assumptions, the following assumptions are made:

1) the FFN is located in the Railway which owns the engine.

2) Every on-engine function is identified by a standardised code.

3) Every on-engine function is associated, either with one Basic Service or with a set of Basic Services (one of which, will be the default service). This association is standardised.

4) During the train journey, all the on-engine functions may be on-train functions (e.g. the driver of engine *xyz* is the driver of train *abc:* he can be called either via the Engine Functional Number or via the Train Functional Number).

5) During a train journey, not all the on-train functions are on-engine functions.

6) The on-train and on-engine function codes are identical

7) If the On Engine Function is related to an On Train Function, then both will be associated with the same set of basic services (or the same basic service) also, the same default service.

8) The registration of the Engine Number on the cab radio mobile (supporting the engine functions/applications) is performed by maintenance operator only.

9) The Engine functions may have a dedicated mobile or they may be reached by a sub-address of another mobile (e.g. the cab radio).

10) The value of the sub-address, associated with a function, is to be standardised.

5.1.3.2. Procedure

This document, property of MORANE, can not be used or duplicated without prior authorisation

In order to make calls through the Engine Number, a FM registration will be performed so that the Functional Engine Number are forwarded towards the MSISDN's of the mobiles located on the engine.
The same procedures as for train numbers apply.

5.1.3.3. Usage

As the engine functions may be provided by a sub-port of a Mobile, it is mandatory, to send the function related Sub-Address to the mobile. The Sub-Addresses have to be derived from the Engine Functional Number in the FFN.

In the case of a Non ISDN, Single Numbering Scheme Terminating Call, the network shall determine the service to be offered to the mobile. This action is performed in the VMSC, by using the standardised relationships between Sub-Addresses, Function Codes and (default) Services (*see Additional Assumptions 6, 7, 10 and Basic Assumption 3 above*)
An example of the addressing to a train, is the same as already shown in the figure 5.1.9.

5.1.4. Calls to train by coach number

5.1.4.1. Additional assumptions

1) No additional assumptions, the same assumptions as for engine numbers apply

5.1.4.2. Procedures

The same procedures as for engine numbers apply

5.1.4.3. Assignment of New functionalities to subsystems

No new functionalities are needed.

5.1.5. Calls to Maintenance Services

5.1.5.1. Additional assumptions

1. Many different functions are possible.
2. For each function, teams are formed and only a few persons per team (depending on skill) are going to have a mobile terminal, thus there is a need to be reachable by team function plus member function within the team function.
3. Terminals are only used for the speech basic service group.

This document, property of MORANE, can not be used or duplicated without prior authorisation

5.1.5.1.1. Additional assumptions for shunting

Although shunting communication is performed using the group call service there exists a relationship to Functional Addressing. The group call service as envisaged for shunting can not offer the requested control of membership. (In addition to an open speech channel, the so called 'common group' closed user group speech channels, the so called 'dedicated groups' are requested). In order to achieve the closed user group characteristics for shunting group calls the service is combined with the Functional Addressing service. With a defined fixed relationship between every area ID, group ID and member ID to a Functional number it becomes possible to use a successful registration as a precondition for membership. The description of this concept can be found in [9].

5.1.5.2. Procedure

The terminals will use a standard MSISDN number and Maintenance Service's Functional Numbers will be needed with the Follow Me service.
The registration/deregistration procedure should be frequently executed, and thus they should be under control of the mobile station.
Procedures could be exactly equivalent to those used for Train Functional Numbers.
The description of the specific procedure for shunting can be found in [9].

5.1.5.3. Usage

Having no sub-functions, Sub-Addresses are not needed .

5.1.5.4. Assignment of new functionalities to subsystems

In all cases, no new functionalities are needed.

5.1.5.5. Calls to train group users

5.1.5.6. Calls to shunting groups

This document, property of MORANE, can not be used or duplicated without prior authorisation

5.2. Location dependent addressing

The scope of this chapter is to identify the functions required from the radio system (GSM-R network) to realize the location dependent routing of mobile originated calls.

The location of the train can be determined exactly only if location information from an external location system (which is outside the scope of the project) is available. For this reason the Location Dependent Addressing specified by Morane is based only on cell specific routing. The cell re-selection procedure as defined in GSM 05.08 is applied by the mobile termination in an unchanged way.

5.2.1. Specific Requirements

The called party on the fixed network side (ISDN party or non ISDN-party) shall be called by a Functional Number, which identifies its function (for instance, primary train controller, electricity supply controller, traffic controller, secondary controller, next/previous controllers).

The call has always to be routed according the information available at the time when the call is originated.

If no additional location information is available or necessary (for instance tracks without balises or railway areas approximately identical to radio cells) or the information of this system is corrupted location dependent routing shall be performed based using the information available from the network (e.g. current cell).
The call is typically originated by the train driver using the cab radio, but the location dependent routing should ideally be supported for other calls, using other terminals.

5.2.2. Capability of the GSM System for Routing of MOC

At the GSM system level there are two items which can be used for routing a call during setup:

- Called party number (Short code)
- Global Cell Identifier (GCI)

The called party number is provided by the Mobile Station to the MSC, the GCI is also provided for each call by the BSC to the MSC on the A-Interface.
Location dependent routing can be done even if there is no location information available. This is possible if the MSC applies a Cell Specific Routing dependent on the Short Code provided by the MS.

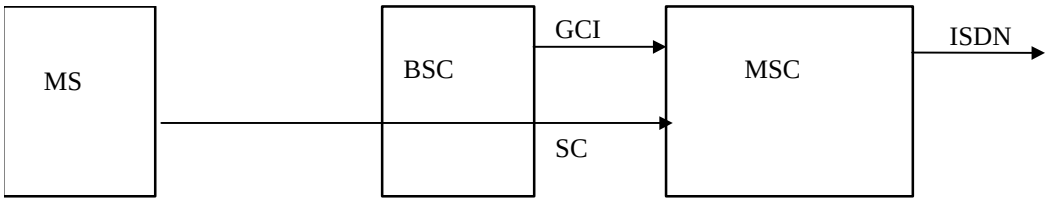

5.2.3. Routing of a MOC based on the provided Functional Number

The GSM radio system infrastructure has to provide a basic telecommunication service which applies a location dependent routing to an address given by static entries in the internal databases of the switching sub-system.

This document, property of MORANE, can not be used or duplicated without prior authorisation

The Location Dependent Addressing mechanism provides a Short Code as the number to be called, the MSC has to apply a Cell Specific Routing taking into account the Short Code provided by the mobile terminal in the setup message. The Global Cell Identifier provided for each call to the MSC consists of two parts: the Location Area Code (LAC) and the Cell Identifier (CI). Therefore the radio cell is identified in a uniquely. Each possible Short Code used within a radio cell is attached to an ISDN number representing the address of the controller to which the call has to be routed. The NSS has to retrieve the ISDN number by accessing its database and setting up the appropriate call afterwards.

These database entries may be managed by OMC operations to realise the mapping of Short Codes to ISDN numbers.

If no unique mapping of the Short Code to a single ISDN number is possible, the MSC can setup a call to an external device (e.g. PABX), which is in charge of handling those calls. The PABX functionality can be co-located with the controller equipment or realised as central device.

In the following example the Short Code X is used for calls to the correct secondary controller. The MSC can route calls from cells with cell identity 1 and 4 (CI=1,4) directly to the correct controller. For calls from cell identity 2 and 3 (CI=2,3) the call has to be routed to an external device (e.g. PABX) in charge of the call handling.

LAC	CI	Short Code	ISDN number	Controller
1	1	X	0179 200 0001	A
1	2	X	0179 200 0001 0179 200 0002	A B
1	3	X	0179 200 0002 0179 200 0001	B A
1	4	X	0179 200 0002	B

This document, property of MORANE, can not be used or duplicated without prior authorisation

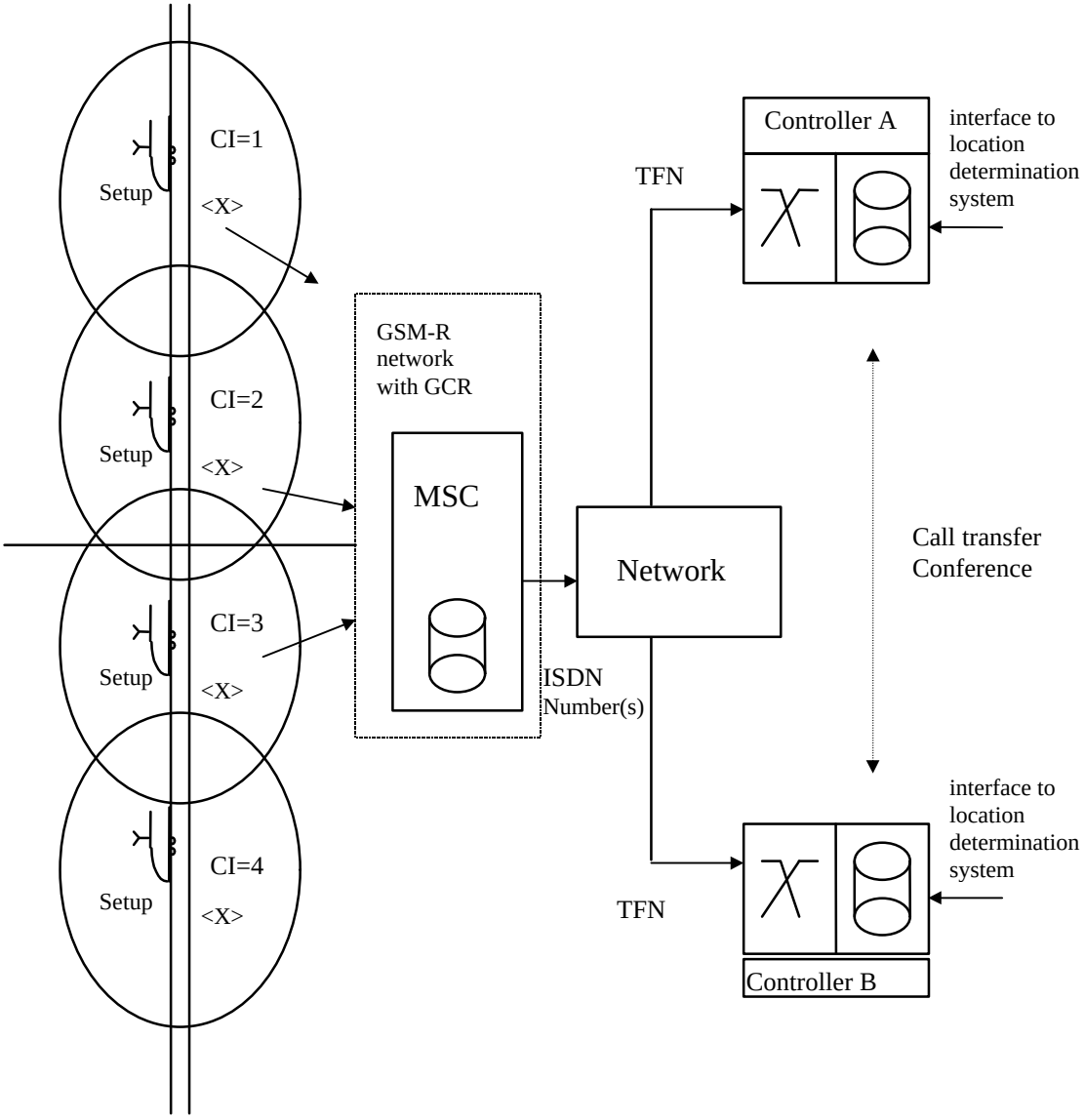
CI=1
Setup
<X>
CI=2
Setup
<X>
CI=3
Setup
<X>
CI=4
Setup
<X>
GSM-R
network
with GCR
MSC
Network
ISDN
Number(s)
TFN
TFN
Controller A
interface to
location
determination
system
Call transfer
Conference
interface to
location
determination
system
Controller B

5.3. Numbering

This chapter will represent the requirements stated in [1] [2] as soon as they have been internally accepted within ERIG.

This document, property of MORANE, can not be used or duplicated without prior authorisation

5.4. Presentation of Functional Numbers to called and calling parties

5.4.1. Generalities

The Functional Number of the calling and called party have to be interpreted by the MMI applications of the fixed or mobile terminal and appropriate information has to be displayed. If an interpretation of the number or a part of the number is not possible due to a lack of information, the corresponding part of the Functional Number shall be displayed without interpretation. Specific design requirements are subject to equipment specifications.

5.4.2. Mobile Terminals of the GSM-R Network

Functional Numbers activated by the Follow Me service cannot be provided using CLIP and CoLP, but the functional number can be transferred using the end-to-end supplementary service UUS1. Therefore a mobile terminal which has registered using the Follow me service has to provide its Functional Number during the call setup procedure using UUS1. IF no Functional Numbers can be used due to no triggered registration or if Functional Numbers are used not activated by the Follow Me service (e.g. regular MSISDN numbers) the presentation can be provided by using the supplementary services CLIP and CoLP.
The application on the terminals responsible for display of Functional Numbers normally uses the information it gets from UUS1 with priority. If no UUS1 information is available the CLIP and CoLP information is used, if available.

If the functional number is available, it is displayed on the MMI, otherwise the MSISDN is displayed. No user selection needed.

5.4.3. Terminals of Networks external to the GSM-R network

If the Functional numbers are used by terminals belonging to external networks, these terminals must have the possibility to activate the presentation of functional numbers and to support the transfer of user-to-user information.

5.4.4. Group/Broadcast calls

Functional Numbers representing group identities and service area codes are mapped to addressing schemes handled in the group call register.

5.4.4.1. GSM Dispatchers

CLIP can be applied in a form that the VGCS/VBS call number, including the service area identity and group identity, can be presented in the calling party sub-address information element of the call control SETUP message to the dispatchers.

This document, property of MORANE, can not be used or duplicated without prior authorisation

5.4.4.2. Originator

CoLP can be applied in a form that the VGCS/VBS call number, including the service area identity and group identity, can be presented in the group call reference information element of the group or broadcast call control CONNECT message to the originator of the call.

This document, property of MORANE, can not be used or duplicated without prior authorisation

5.5. *Priority calls & acknowledgement*

5.5.1. Scope

The scope of this chapter is to present proposals for a solution to functional requirements of priority calls and acknowledgements within EIRENE.

5.5.2. Functional Requirements for Priority Calls

5.5.2.1. Assignment of the desired priority level of a call by the calling party

For a priority call the calling subscriber has to assign the desired priority level of a call by MMI action.

In the case of GSM with enhanced multilevel precedence and pre-emption service (eMLPP as defined in GSM 03.67) and ISDN with multilevel precedence and pre-emption service (MLPP as defined in ITU/CCITT Recommendation I.255.3) the priority of the call is indicated in a special information element in the call set-up. In the case of MOC, the priority info is send in the CM_SERVICE_REQUEST and in case of MTC in the PAGE_MS messages. The mapping of railway and eMLPP priorities to MLPP priorities (and vice versa) is shown in the following tables.

Railway Priority	mobile eMLPP	MLPP (fixed network)
Other	CALL_PRIORITY_LEVEL_4 (001)	Routine (0100), Prio 4
Railway information	CALL_PRIORITY_LEVEL_3 (010)	Priority (0011), Prio 3
Control-command (info)	CALL_PRIORITY_LEVEL_2 (011)	Immediate (0010), Prio 2
Railway operation	CALL_PRIORITY_LEVEL_1 (100)	Flash (0001), Prio 1
Public emergency	CALL_PRIORITY_LEVEL_0 (101)	Flash override (0000), Prio 0
Control-command (safety)	CALL_PRIORITY_LEVEL_B (110)	Flash override (0000), Prio 0
Railway Emergency	CALL_PRIORITY_LEVEL_A (111)	Flash override (0000), Prio 0

Table 1: Outgoing Mapping table for eMLPP

This document, property of MORANE, can not be used or duplicated without prior authorisation

MLPP (fixed network)	eMLPP (GSM network)
Routine (0100)	CALL_PRIORITY_LEVEL_4 (001)
Priority (0011)	CALL_PRIORITY_LEVEL_3 (010)
Immediate (0010)	CALL_PRIORITY_LEVEL_2 (011)
flash (0001)	CALL_PRIORITY_LEVEL_1 (100)
Flash override (0000)	CALL_PRIORITY_LEVEL_0 (101)

Table 2: Incoming MLPP mapping table

The subscriber can choose the desired priority level by MMI action up to a pre-defined highest level. For a mobile subscriber this maximum level of priority is stored on the SIM card. In order to ease call handling, a default priority level can be assigned for every subscriber.

Note that an emergency call will always have the highest priority. Therefore all mobile subscribers who are entitled to establish an emergency call must be allowed to use the highest priority for the emergency call.

5.5.2.2. Handling of priorities in the network (fixed network and EIRENE network)

In the case of congestion the network should be able to pre-empt calls with a lower level of priority in order to allow the set-up of a higher priority call. Often this is called "resource pre-emption".

This feature is only supported in an ISDN network with MLPP and in a GSM network with eMLPP. In these networks the handling of priorities is based on the priority information in the SETUP message.

Overdimensioning is the preferred solution for the fixed network because the dispatcher terminal can manage and display a queue of several calls in priority order and allows the operator of the terminal to switch between calls as required. In this case MLPP is still used to convey the priority to the dispatcher terminal, but it need only be transported by the fixed network and interpreted by the dispatcher terminal.

5.5.2.3. Indication of the priority level of a call at the destination terminal for point to point calls

The indication of the priority level of a call can only be done in an ISDN network with MLPP or in a GSM network which supports eMLPP. In these networks the SETUP message contains the priority information of the call.

In order to deliver the SETUP message to the destination GSM terminal if there is already an existing call, the GSM supplementary service Call Waiting has to be supported. The destination terminal decides whether or not to pre-empt the existing call depending on the

This document, property of MORANE, can not be used or duplicated without prior authorisation

priority level of the arriving call and the priority level of the existing call. This is often called "called party pre-emption".
In the fixed network the dispatcher terminal can receive multiple incoming call indications without the need for the ISDN supplementary service Call Waiting, leaving the choice of whether to accept a call to the operator of the terminal. The details of the mechanism can be found in the corresponding FFFIS document for the dispatcher terminal.

On the application level the automatic answering feature can be implemented. If the priority level of a call is higher than a certain pre-defined level, the terminal accepts the call automatically without any user action. In the case of a mobile terminal this pre-defined priority level for automatic answering is stored on the SIM card and can be adjusted by MMI action.

5.5.3. Functional Requirements for Acknowledgement

According to **[1]** there is a need for the acknowledgement of high priority voice broadcast and voice group calls, particularly emergency calls. (For point to point calls there should be no need for an extra acknowledgement). This "acknowledgement" covers not only reception of the call by its recipients, but also recording of the fact that the call was made by its initiator. Acknowledgement is only required for mobile subscribers.

The reference **[1]** provides more information about the user requirements.

From a functional point of view the requirements for the acknowledgement can be classified as follows:

- Informing those involved in the voice broadcast or voice group call - to be more precise, the terminals of those involved - that the call has to be acknowledged.
  Automatic acknowledgement has to be performed.

- Informing the terminals of those involved in the call to which address the acknowledgement has to be sent.

- Defining which telecommunication service has to be used for the acknowledgement.

5.5.3.1. Informing the listening subscribers about the need for the acknowledgement of a call

According to the specifications for the voice group call service and the voice broadcast service the terminals of the recipients will be informed about the need for the acknowledgement of a call by a special flag, the so-called acknowledgement flag, which is included in the group or broadcast call reference information element within the NOTIFICATION messages.
Additionally a priority level is stored as a parameter in the mobile terminal. The terminal shall send an acknowledgement, the so called confirmation message after completion of a call with higher priority than the selected level.

5.5.3.2. Address of the acknowledgement centre

The recipient of emergency call acknowledgements will be at the level of the primary controller. The address (telephone number of the "acknowledgement centre") should be available as part of the location dependent addressing scheme.

5.5.3.3. Telecommunication service used for acknowledgement?

The acknowledgement is done by sending a « confirmation message » as a UUS1 information element in a standard call set up.

This document, property of MORANE, can not be used or duplicated without prior authorisation

5.6. Shunting mode

5.6.1. Scope

The scope of this chapter is to identify the functional requirements of the shunting mode and to present the guidelines for a solution to these functional requirements within EIRENE.

5.6.2. Functional requirements

A group of personnel involved in shunting directly or indirectly should have an easy to use way for communicating with each other. The group is composed of the following type of participants:

- One person leading the actions, the so called **'shunting leader',** which is entitled to initiate and release this communication link(s).
- Up to three additional persons which may participate to the communication, the **'shunting members'.**
- In addition one **driver** and one **dispatcher** which shall be able to be part of the communication as well.

Shunting leader and members use operational handheld with shunting application. Drivers normally use a different kind of mobile equipment, the so called "cab radio". Dispatchers normally are fixed network participants but may also use mobile equipment.
To stay in contact with external persons the shunting leader should be able to receive and send calls during an ongoing shunting communication. But in opposite the other members should not be interrupted by other incoming calls in order not to disturb them and shall not be able to perform outgoing calls.
All mobile members of the shunting group, except the driver, can send a **'link assurance signal'**, but only one at one and the same time for a given pushing movement.
For safety reasons all this shall not prevent from receiving or sending **'shunting emergency'** calls.

5.6.3. Guidelines for a technical solution

As a matter of principle for GSM-group calls (VGCS), the actual composition of groups is not known by the system. Activation of stored Group IDs on SIM allows listening to an actual Group Call. This is well suited for emergency calls but not for the envisaged use of group calls in shunting mode.
Shunting group calls need to be closed groups under control of the shunting leader who participates in the group call.
To overcome this problem and to provide the shunting leader with full control over the composition of his shunting team, the mechanism of functional addressing (FA) shall be used in parallel to the group call service.
For the GSM network this two services (VGCS and FA) are independent services. A fixed relationship of functional numbers and group call reference numbers is defined in [2].
For further technical details refer to [9].

This document, property of MORANE, can not be used or duplicated without prior authorisation

5.7. Direct mode

5.7.1. Scope

The scope of this chapter is to identify the functional requirements of the direct mode and to present proposals for a solution to these functional requirements within EIRENE.

5.7.2. Functional Requirements

The direct mode is intended to

- provide short range communications for railway personnel operating in remote areas where no GSM network coverage is available;

- and as a further option to provide short range fall-back communications between train drivers and trackside personnel in the event that primary GSM facilities fail and there are no fall-back GSM facilities, e.g. coverage by a public GSM network (PLMN).

According to EPT Change Request ref **[7]** concerning chapter 12 "Direct Mode" of **[1]** the implementation of direct mode is optional.

From the above mentioned document the principal requirements are:

- a range of 2000 m in open terrain between a direct mode transmitter and receiver;
- voice only capability;
- "open channel" mode of operation such that all users employing direct mode can receive the transmitted signal when in range of the transmitting user.
- half duplex mode of operation;
- at least one channel is to be available for the use of direct mode facilities;
- the shunting link assurance signal is to be supported;
- where provided as a fall-back, direct mode is to be integrated into EIRENE handportables and cab radio equipment, in particular a common MMI is to be provided;
- where equipment provides both GSM and direct mode capability, the user shall be able to switch between the two modes in a straightforward manner (but not by accident);
- direct mode must operate within the UIC frequency allocation or a band available across Europe which is readily accessible by each railway.

  When direct mode is operated in the UIC frequency allocation only the lower subband (876-880 MHz) can be used.

- simple user control e.g.
  - direct mode on/off switch,
  - press-to-talk button,
  - channel selection,
  - volume control
  - battery warning for handportables

5.7.3. Possible Technical Solutions for Direct Mode

This document, property of MORANE, can not be used or duplicated without prior authorisation

It is generally accepted that GSM cannot provide the direct mode facility. Therefore EIRENE will need a second mobile termination, i.e. a transceiver within the EIRENE radio which supports the direct mode facility. Thus an EIRENE radio will be a dual-mode radio.

The direct mode facility shall be based on an existing standard or system.

A possible solution could be the combination of GSM and a conventional open channel analogue radio, e.g. the train radio according to **[8]**. This would be highly advantageous if one considers the strategy for the deployment of the EIRENE system. It is likely that there will be a need for a dual mode radio - GSM/EIRENE and analogue train radio according to **[8]** - in most engines for a long period of time in order to allow an unrestricted operation of these engines over the whole railway network which will be partly equipped with the new GSM/EIRENE infrastructure and partly equipped with the old infrastructure for the analogue train radio.

This document, property of MORANE, can not be used or duplicated without prior authorisation

5.8. Multiple driver communications on the same train

Multiple driver communication is necessary for trains equipped with multiple active traction vehicles. The main application is driver-to-driver communication.
Calls from other subscribers to the train are normally done by using the Train Functional Number activated by a registration procedure for the leading driver.

5.8.1. Equipping of Engines with Mobile Terminals

If only one engine is equipped with a mobile termination, an on-board communication system has to be used for communication between drivers. This solution has no further implications on the GSM-R system but cannot be assumed as a general solution because it often not possible to realise it in this manner.
Therefore for the following it is assumed that every engine is equipped with one or more mobile termination. In this case the driver-to-driver communication as well as communications with other subscribers are normal calls within the railway network and so the pre-emption mechanisms for priority calls can be applied.

5.8.2. Communication Principles

Communication between drivers is based on a point-to-point connection. If more than two drivers or other subscribers are to be included in the communication, the Multy-Party Supplementary Service has to be used.
This applies also for the cases where a point-to-point connection between drivers or between the driver and another subscriber already exists. In these cases additional communication parties can be included in the call using the standard procedures for setup of a Multy-Party call.

Calls to additional drivers by Train Functional Number is only possible if an activation of the functional addresses for these drivers has been done by a registration procedure. Subscribers other than the drivers normally call the train by its Train Functional Number, which is activated by the correct driver using the registration procedure.

This document, property of MORANE, can not be used or duplicated without prior authorisation

5.9. Dispatcher MMI

5.9.1. Introduction

This section describes the MMI requirements of the MORANE dispatcher equipment. The requirements are derived largely from reference **[1]**. The necessary functions required for the different types of controller exhibit a significant amount of overlap. Therefore only one set of MMI requirements is presented below which will meet the requirements of all of the various controller types.

5.9.2. Required MMI Functions

This document deals with the requirements which apply to the Dispatcher and in particular to the MMI features and functions which are therefore required.
Several key areas of Dispatcher functionality are identified in reference **[1]** along with some other requirements. These functions impose various requirements on the Dispatcher MMI. The actions which the Dispatcher MMI must be able to perform and handle in order to meet the Functional Requirements can be split into the following categories, some of which are then sub-divided.

1. Display mobiles

    1a all mobiles under control (including, as applicable, stock number, running number, function). This can include groups. Note that for the purposes of the Morane trials the variation of the list of mobiles under control may be simulated to avoid linking to train positioning systems which are not standardised.

    1b all incoming calls (in a queue including priority of the calls)

2. Increase ‘obviousness’ of high priority incoming calls

3. Allow selection of one mobile (to receive a call or to establish a call of railway emergency, safety, public emergency or railway operation priority)

4. Allow termination of a call

5. Display status of connection to remainder of fixed network

6. Allow the establishment, closing, entering and leaving of group calls (at railway emergency, safety, public emergency or railway operation priority)

One other significant action can be deduced from other parts of reference **[1]**. This is:

7. Selection of language for MMI display .

It can be argued that this will never change within a particular dispatcher position but the flexibility will be maintained by providing the function.

5.9.3. Implementation and Display

Details of the design produced by the Dispatcher MMI Work Package can be found in the Dispatcher MMI Specification, document ref. K12 T 7006.

This document, property of MORANE, can not be used or duplicated without prior authorisation

5.10. Driver MMI

5.10.1. Introduction

This section considers a principal list of functions for the driver Man Machine Interface. An example of the general structure of the EIRENE cab radio is illustrated in figure 5.10.1.1.

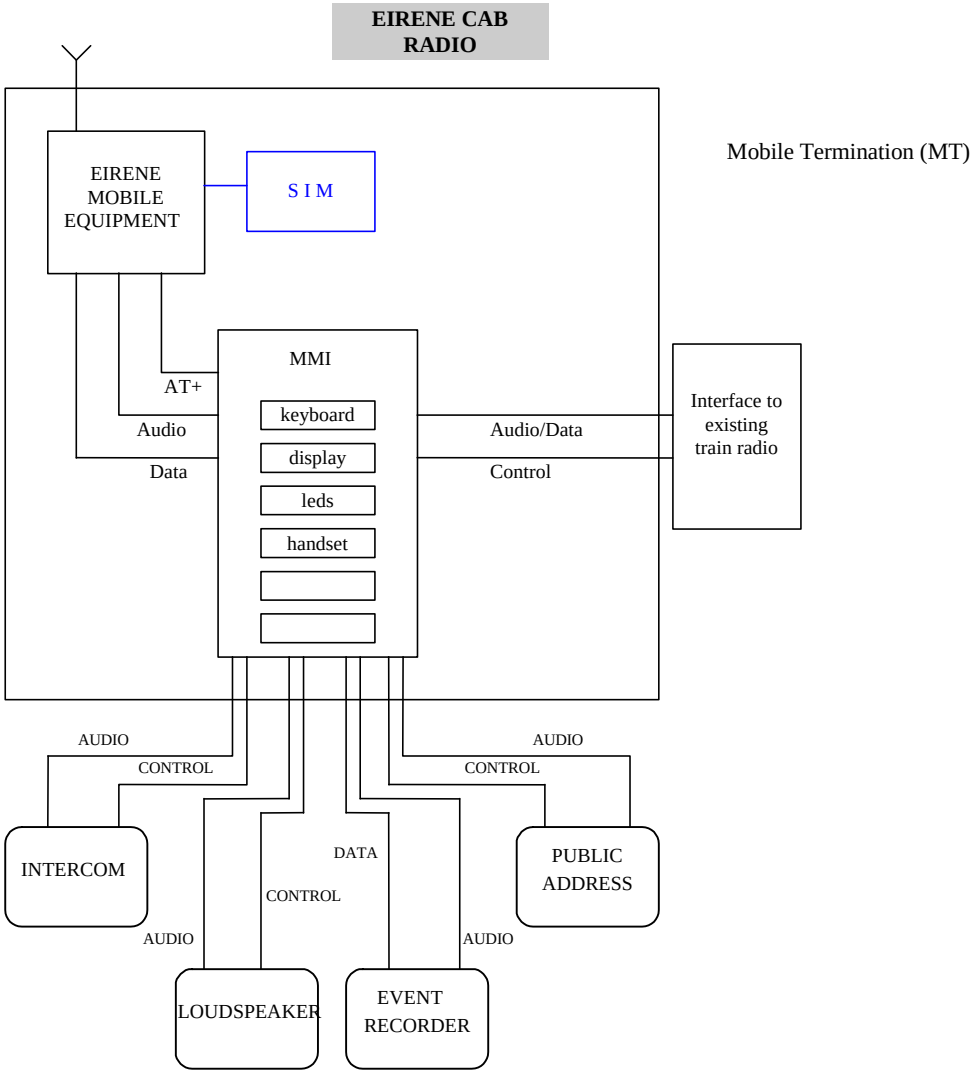

Figure 5.10.1.1-Cab radio system

The purpose of the MORANE project is mainly to meet the EIRENE Specification and, therefore, this section covers those functions which must be provided. It is useful to start first with a subdivision of the different types of function available for the MMI. These are in order to operate and maintain an EIRENE cab radio:

- general functions
- call-related functions.

Maintenance and diagnostic functions shall be provided through the use of a separate maintenance terminal which can be plugged into the cab radio when maintenance functions are required.

5.10.2. General functions

General functions are those functions which are not directly associated with making and receiving calls for the management of the radio.

5.10.2.1. Switch MMI on/off

The MMI on/off control shall be designed to prevent accidental activation/deactivation of the radio (e.g. a single keystroke should remain pressed for more than TBD seconds). When the MMI is switched on, the following steps should happen:

- a transitory illumination of the display and of all the control and indicator lights
- an automatic self test of the radio and the MMI itself
- a self test message result shall appear.

After the switch-on function the following parameters shall be set to their default values:

- loudspeaker volume
- language
- contrast
- brightness

The switch-off function shall be “soft” in order to control the termination of a current call and to store the required data.

5.10.2.2. Select language

By default, prompts and messages shall be displayed in the last language chosen before the last switch off. It shall be possible for the user to display a list of available languages and to select the language in which the radio related prompts and messages are displayed, both at turn on and during a journey. The languages to be supported shall be 10.

5.10.2.3. Select mobile radio network

Although the network will normally be selected automatically, a means by which the driver can override the automatic network selection process shall be provided. This is in order for the network to be manually selected. It shall be possible for the user to view, and select from a list of all the available mobile radio networks.

This document, property of MORANE, can not be used or duplicated without prior authorisation

5.10.2.4. Adjust loudspeaker volume

User adjustment to increase and decrease the loudspeaker volume shall be provided. By default (see par. 5.11.2.1), the volume shall be set to a pre-determined level suitable for the operating environment. At least 5 levels shall be provide.

The maximum and the minimum volume levels should be as follows:

- maximum 8.5W (39 dBm)
- minimum 250 mW (24 dBm)

When the mobile is tuned to the lowest acoustic level, all messages must be audible.

5.10.2.5. Register and deregister running number

It shall be possible for the driver to register and deregister a train's running number in the following way :

- entering the running number
- initiating an automated request

5.10.2.6. Register and deregister on-train users

The functional number shall be automatically registered/deregistered with the network when a train's running number is registered/deregistered .
It shall be possible to register and deregister the functional numbers of other on-train users who may be addressed individually via the cab radio, for example:

- chief conductor
- conductors
- catering staff
- others.

The functional numbers of on-train users addressed via CAB RADIO shall be automatically deregistered when the train's running number is deregistered.

5.10.2.7. Service availability indication

An audible and visual indication shall be provided to the driver if the service availability indication is lost.

This document, property of MORANE, can not be used or duplicated without prior authorisation

5.10.2.8. Invoke supplementary services

The general MMI functions are required to support the following supplementary services:

- Call Forwarding Unconditional (CFU)
- Call Hold (HOLD)
- Multi Party service (MPTY).

5.10.2.9. Invoke automatic self test

It shall be possible to initiate an automatic self test of the radio.
Such a test shall not prevent.
An automatic self test may be designed in order to avoid accidental activation (e.g. a single keystroke should remain pressed for more than TBD seconds).

5.10.2.10. Adjust display settings

It shall be possible to adjust the brightness of the display.
It shall be possible to adjust the contrast of the display.

5.10.3. Call related functions

The MMI shall provide a means for the driver to perform outgoing calls and to accept incoming calls in a quick and easy manner.

5.10.3.1. Outgoing calls

It shall be possible to initiate outgoing calls in one of four ways, depending on the intended recipient of the call:

- emergency access (rapid activation with minimum action required of the driver, logged in the on-train recorder, also audible and visual indication)
- priority access (rapid activation with minimum action required of the driver)
- stored number (through the selection of a stored number, or name)
- dial access (to enter the telephone and functional numbers manually).

The call shall be connected to the loudspeaker until the driver picks up the handset.

This document, property of MORANE, can not be used or duplicated without prior authorisation

5.10.3.1.1. Emergency access

It shall be possible to initiate the following emergency call :

DESTINATION	TYPE
Emergency call address	Group call

An audible and visual information that the emergency function has been activated shall be provided in the cab.

Once the call is terminated, the indication in the cab shall cease.

5.10.3.1.2. Priority access

It shall be possible to initiate the following calls:

Destination	**Type**
Primary train controller	Point-to-point
Other controllers	Point to point
Electricity power supply controller	Point to point
Other drivers in the same area	Group call
Other driver in the same train	Point-to-point (Multi party)
Train staff	Point-to point
Other	TBD

After the activation of *Train staff,* the MMI shall present the following:

Train staff
Chief conductor
Conductor
Catering staff
Security services
Other

The driver shall then be prompted to make a selection.

5.10.3.1.3. Stored numbers

The driver shall be able to initiate a call by selecting a name/number from the selection list stored on the MMI itself.
For the maintenance people, it shall be possible to manage this agenda (to store, delete and display each entry).

This document, property of MORANE, can not be used or duplicated without prior authorisation

5.10.3.1.4. Dial access

The driver shall be able to initiate a call by dialling any valid telephone number or functional number.

5.10.3.2. Incoming calls

It shall be possible to receive voice calls for the driver.
Group calls, broadcast calls and Railway operation PTP calls shall automatically be connected to the loudspeaker.

5.10.4. Other call related functions

5.10.4.1. Direct mode

It shall be possible for the driver to enter/leave direct mode (the MMI shall provide the functions necessary to support direct mode communications).

5.10.4.2. Monitor calls to other on-train users/devices

For voice call using the Cab radio not involving the driver, the MMI shall be able to monitor the audio output of the communication.

5.10.4.3. Cab radio portable

The MMI shall provide a means of forwarding calls from the cab radio to the cab radio portable, when it is in use. A means shall be provided to ensure that calls are directed back to the cab radio when the driver's handheld unit is returned to the cab.

This document, property of MORANE, can not be used or duplicated without prior authorisation

6. Allocation of Function and Subfunction to Subsystems

In the following tables, additional functionalities are indicated by a "*" symbol in the relevant cell.

6.1. Call to a train by train functional number

Subfunctions	External to GSM	**NSS**						**BSS**	**EIRENE Radio**	
		MSC	VLR	HLR	FFN	SMSC	GCR		MT	APP
Follow_Me Registration				*	*					*
Follow_Me Deregistration				*	*					*
Follow_Me Interrogation				*	*					*
Retrieving of service from SubAddress		*								
Usage				*	*					

6.2. Calls to a train by engine functional number

subfunctions	External to GSM	**NSS**						**BSS**	**EIRENE Radio**	
		MSC	VLR	HLR	FFN	SMSC	GCR		MT	APP
Follow_Me Registration				*	*					*
Follow_Me Deregistration				*	*					*
Follow_Me Interrogation				*	*					*
Retrieving of service from SubAddress		*								
Usage				*	*					

6.3. Calls to a train by coach number

subfunctions	External to GSM	**NSS**						**BSS**	**EIRENE Radio**	
		MSC	VLR	HLR	FFN	SMSC	GCR		MT	APP

subfunctions	External to GSM	**NSS**						**BSS**	**EIRENE Radio**	
		MSC	VLR	HLR	FFN	SMSC	GCR		MT	APP
Follow_Me Registration				*	*					*
Follow_Me Deregistration				*	*					*
Follow_Me Interrogation				*	*					*
Retrieving of service from SubAddress		*								
Usage				*	*					

6.4. Calls to Maintenance Services

subfunctions	External to GSM	**NSS**						**BSS**	**EIRENE Radio**	
		MSC	VLR	HLR	FFN	SMSC	GCR		MT	APP
Follow_Me Registration				*	*					*
Follow_Me Deregistration				*	*					*
Follow_Me Interrogation				*	*					*
Usage				*	*					

6.5. Location dependent addressing

subfunctions	External to GSM	**NSS**						**BSS**	**EIRENE Radio**	
		MSC	VLR	HLR	FFN	SMSC	GCR		MT	APP
Retrieve of called party number										* Functional Number
Routing function (cell dependent)	* Dispatcher Application	*					* if VGCS or Pre-set conference			

6.6. Group/Broadcast calls

subfunctions	External to GSM	**NSS**						**BSS**	**EIRENE Radio**	
		MSC	VLR	HLR	FFN	SMSC	GCR		MT	APP
Usage		*					*	*	*	*

6.7. Presentation of functional number

subfunctions	External to GSM	**NSS**						**BSS**	**EIRENE Radio**	
	Dispatcher ISDN	MSC	VLR	HLR	FFN	SMSC	GCR		MT	APP
	*	*								*

6.8. Priority calls & Acknowledgement related functionalities

6.8.1. Priority calls

subfunctions	External to GSM	**NSS**						**BSS**	**EIRENE Radio**	
	ISDN	MSC	VLR	HLR	FFN	SMSC	GCR		MT	APP
Assignment of priority level by calling party	* Terminal								*	*
Handling of priority in the network	* Network	*					(*) only for VGCS	*		
Indication of the priority level at the called terminal / Automatic Answering	* Terminal								*	*

6.8.2. Acknowledgement

subfunctions	External to GSM	**NSS**						**BSS**	**EIRENE Radio**	
		MSC	VLR	HLR	FFN	SMSC	GCR		MT	APP
Information whether acknowledge ment has to be done							*			*
Sending the acknowledge ment messages										*
Logging the acknowledge ment messages	*									

6.9. Shunting Mode related functionalities

subfunctions	External to GSM	**NSS**						**BSS**	**EIRENE Radio**	
		MSC	VLR	HLR	FFN	SMSC	GCR		MT	APP
Enter/leave shunting mode										*
Shunting group call initiation	see 6.7									
Shunting group call set-up	see 6.7									
Add user to existing shunting group										*
Add a driver to existing shunting group										*
Remove user from shunting group										*
Change between shunting groups										*
Terminate a shunting group call	see 6.7									
Link assurance signal										*
Emergency signal handling	*	*					*	*	*	*

This document, property of MORANE, can not be used or duplicated without prior authorisation

6.10. Direct mode

subfunctions	External to GSM	**NSS**						**BSS**	**EIRENE Radio**	
		MSC	VLR	HLR	FFN	SMSC	GCR		MT	APP
									*	*

6.11. Multiple driver communication

subfunctions	External to GSM	**NSS**						**BSS**	**EIRENE Radio**	
		MSC	VLR	HLR	FFN	SMSC	GCR		MT	APP

6.12. Cab Radio Functions

subfunctions	External to GSM	**NSS**						**BSS**	**EIRENE Radio**	
		MSC	VLR	HLR	FFN	SMSC	GCR		MT	APP
										*

6.13. Dispatcher

subfunctions	External to GSM	**NSS**						**BSS**	**EIRENE Radio**	
		MSC	VLR	HLR	FFN	SMSC	GCR		MT	APP
	*									*

This document, property of MORANE, can not be used or duplicated without prior authorisation

7. Environmental Specification

7.1. Introduction

Environmental parameters can be physical, chemical or biological.

The 5 classes of environmental conditions, which have a direct effect on the GSM for railway (GSM-R), are :

1- climatic conditions
2- mechanical conditions
3- electrical conditions
4- material environment
5- human environment

The different locations which may be influenced by these environmental conditions are: the track, the trackside, the interior and the exterior of the train.

In the **GSM-R** case, the locations of the different elements, which belong to the radiomobile network, influenced by these conditions are :

- the trackside, for outdoor equipment (more or less close to the track)
- the different types of rooms for indoor equipment :
- specific buildings build alongside the track
- rooms in existing buildings (stations, technical centres and so on)
- the exterior of the train (on the roof)
- the interior of the train (engine room, equipment room, driver's cab)

Remarks :

- When several standards are quoted for the same table (or figure), the values given in the table correspond to the most restricting values within the standards.

- In certain standards (for example , IEC or EN 60529 standards) classes of severity are defined. The supplier has to indicate the severity class to which his equipment belongs.

This document, property of MORANE, can not be used or duplicated without prior authorisation

7.2. Climatic conditions

7.2.1. Ambient temperature

- Mobile equipment

Mobile equipment in operation shall be capable of withstanding, without damage, the range of ambient temperature described as follows **[10] [11] [12]**.

	Range of ambient temperature (°C)
Roof	-40 +70
Engine room	-40 +70
Equipment room	-40 +70
Cab radio	-20 +70
General purpose radio	-20 +55
Operational radio	-20 +55
Storage	-40 +70

Table 7.1

Note : the highest values correspond to dry heat conditions.

If the performances of the equipment are modified (in extreme conditions of temperature), the values have to be indicated by the supplier.

The maximum variation of temperature is **40°C**, with a maximum gradient of **3°C/s [10]**. Such a variation is achieved when entering or leaving a tunnel for example.

Mobile equipment must be operational (at the latest) **60 sec** after switch on, in any conditions of temperature.

The operational radio shall be capable of withstanding exposure to extreme environmental conditions as defined in IEC 721 part 1.

- Fixed equipment

Fixed equipment in operation shall be capable of withstanding, without damage, the range of ambient temperature described as follows **[10] [11] [12]**.

This document, property of MORANE, can not be used or duplicated without prior authorisation

	Range of ambient temperature (°C)
External, exposed	-40 +70
Equipment room without climatic control : - with greenhouse effect - without greenhouse effect - frost impossible	 -40 +70 -40 +55 +5 +55
Equipment room with climatic control	+5 +45

Table 7.2

Note : the highest values correspond to dry heat conditions.

Distribution of the outdoor ambient temperature and of the temperature within a room without climatic control will depend on the country.

On the other hand, the typical distribution of the ambient temperature in a room under climatic control, for all countries, can be described as follows :

Temperature in the room	Average occurrence per year
≤ 24 °C	70 %
24 °C to 26 °C	15 %
26 °C to 30 °C	10 %
30 °C to 34 °C	4 %
≥ 34 °C	1 %

Table 7.3

If the performance of the equipment is modified (in extreme conditions of temperature), the values have to be indicated by the supplier.

The maximum variation of temperature for fixed outdoor equipment is **60°C** in 12 hours **[11]**.

7.2.2. Solar radiation

The irradiance (solar radiated power density) is expressed in watts per square metre. It depends on the content of aerosol particles, ozone and water vapour in the air. It varies considerably with geographical latitude and type of climate.

The 2 main consequences of irradiance are :

- the heating effect on the equipment components and on the equipment environment (for example, equipment can attain temperatures up to 70°C if fully exposed to solar radiation in an ambient temperature as low as 40°C).

- the photochemical degradation of material.

Equipment exposed to the effect of solar radiation shall remain unaffected.

The maximum value of **1120 W/m^2** for the global radiation at the surface of the earth from sun and sky, with the sun at its zenith has to be considered **[10] [12]**.

This document, property of MORANE, can not be used or duplicated without prior authorisation

7.2.3. Humidity (relative humidity, absolute humidity, condensation, adsorption, absorption and diffusion)

Humidity affects joints, conductors, etc., and promotes metal corrosion, as it possess a certain electrical conductivity. Moreover, it may cause water to condense on parts of equipment, when temperature suddenly changes (when entering or leaving a tunnel for example).

The equipment shall be designed and manufactured to withstand the following external humidity levels, defined below (limit values), over the complete range of ambient temperature values **[10]**.

	Relative humidity
Yearly average	≤ 75 %
On 30 days in the year, continuously	95 %
On the other days, occasionally	100 %
Maximum humidity for indoor, at -5°C	75 %

Table 7.4

The maximum absolute humidity is **30 g/m^3 [10]**.

7.2.4. Air pressure and altitude

The normal value of air pressure at mean sea level is 101.3 kPa. Depending on meteorological conditions, air pressure at sea level may vary from approximately 95 % to 107 % of this value.

In areas above sea level, air pressure is lower than at sea level. On the contrary, in areas below sea level, it is higher than at sea level.

Equipment shall be capable of withstanding the altitudes and pressures described below.

	Maximum	**Minimum**
Altitude	2000 m	-120 m
Corresponding pressure	70 kPa	106 kPa

Table 7.5

Moreover, pressure pulse (due to vehicles crossing or vehicles entering a tunnel), must also be taken into account.

For information only, exterior pressure pulses of about **6 kPa** (peak to peak), due to two high speed trains crossing in a tunnel, were recorded in France. The length of this shock was about 3 seconds.
The exterior equipment shall also be capable of withstanding a pressure gradient below or equal to 100 kPa/s.
For equipment installed inside the vehicle, the pressure gradient will depend on how airtight the body and windows are.

The diagram below, (see ref. **[18]**) describes the shape of the pressure wave in the tunnel.

This document, property of MORANE, can not be used or duplicated without prior authorisation

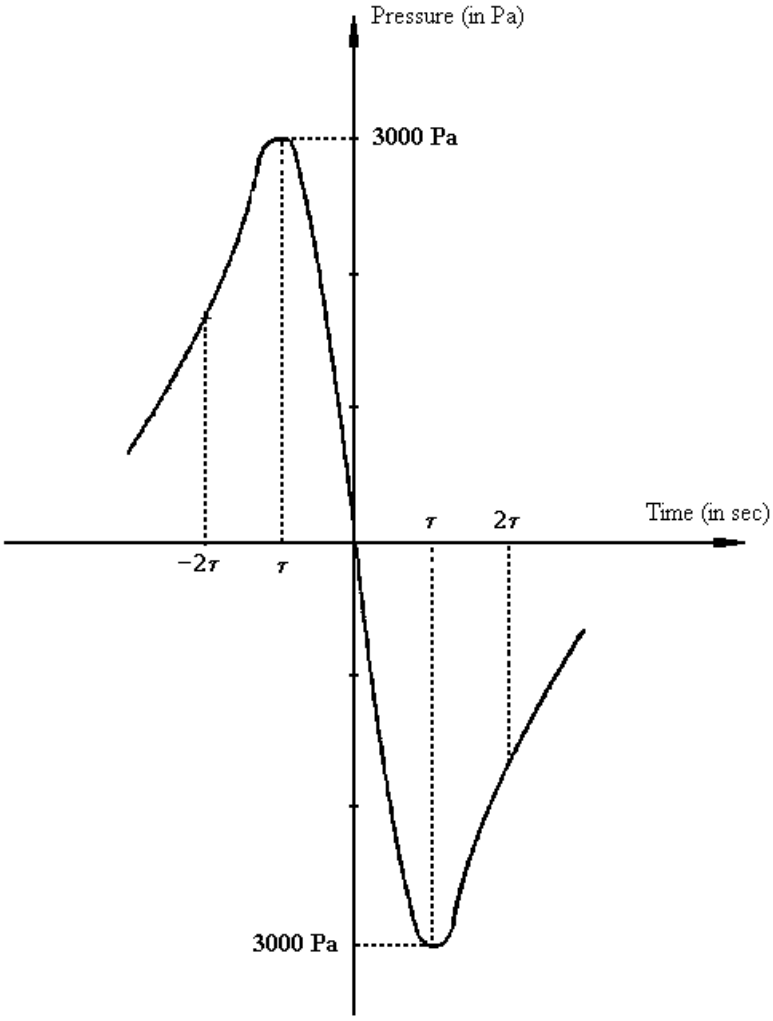

With 1/100 s ≤ τ ≤ 2/100 s

Figure 7.6

7.2.5. Water and precipitation

- Rain

For mobile equipment installed or used outside the railway rolling stock (antennas for example), the rain rate to be taken into account is **6 mm/min [10]**.
Fixed outdoor equipment shall be capable of operating in rain and preventing the penetration of rainfall at a minimum rate of **2 mm/min [10]**.

As a general rule, all equipment shall respect the ref.**[20]**. The required Indices of Protection are :

- for fixed equipment or mobile equipment inside vehicles : IP 51
- for portable stations without bag or handheld stations : IP 54 (IEC 529/EN60529)
- for the accumulator battery alone : IP 54

- Snow and hail

Outdoor equipment must be able to operate in intense precipitation conditions of snow and hail. So care must be taken regarding the effects of snow and hail. Indeed, they can enter into blocks, chests and cabinets, if no precaution is taken. Then water can appear on parts of equipment.
Moreover, the maximum diameter of hailstones, able to strike outdoor equipment, can reach 20 mm.

- Ice and frost

Outdoor equipment must be able to operate in the face of ice and frost. In particular, for mobile equipment, the presence of ice shall be considered on equipment installed outside the vehicle (on the roof for example). In such conditions, if the performance of the equipment is modified, it shall be specified, either in the product standard or by the supplier.
Moreover, in certain conditions, a layer of frost can appear on the mobile or fixed devices. For example, in case of icy fog or water condensation.

- Salt water

Equipment shall be protected from heavy salt spray and shall be capable of operating in such conditions.

This document, property of MORANE, can not be used or duplicated without prior authorisation

7.3. Mechanical conditions

The effects of mechanical constraints in the railway environment shall not be minimised, especially the effects of vibrations and shocks.

7.3.1. Vibrations

- Mobile equipment

All mobile equipment shall be protected against shock and vibration in compliance with standards defined in prEN 50125 using tests defined in prEN 50155.
Mobile equipment shall be capable of withstanding 2 types of vibrations: sinusoidal vibrations and random vibrations. The different levels of these vibrations are described below.

- The **sinusoidal vibrations** (accelerations and frequencies) to which the trainborne equipment shall be exposed, depends upon the equipment location within the vehicle and on the method of fixing the equipment. The variation is considered to be sinusoidal.

To evaluate the effects of railway sinusoidal vibrations on the equipment, it is essential to determine the resonant frequencies for each mobile equipment.

For information only, the ranges of resonant frequencies are **[11]** :

- body : 5 to 20 Hz
- equipment inside the body :
- mechanical : up to 40 Hz
- electric : up to 100 Hz
- electronic : up to 1000 Hz

This table provides equivalent sinusoidal maximum conditions to be expected within equipment [10].

Location of equipment	Frequency range (Hz)	Amplitude (mm)	Acceleration (g)
Vehicle interior cab	5 to 200	7.5 (peak to peak)	1.5 (peak)
Vehicle interior non-cab	5 to 200	7.5 (peak to peak)	1.5 (peak)
Vehicle exterior body mounted	5 to 1000	5 (peak to peak)	2.5 (peak)

Table 7.7

Moreover, equipment installed in tractive units and other vehicles shall be capable of withstanding vibrations up to 1200 Hz at the locomotive body.

- Mobile equipment shall also be capable of withstanding **random vibrations**.

Equipment is subjected to a total effective acceleration equal to **[11]** :

Vertical axis	1.4 g
Transverse axis	0.7 g
Longitudinal axis	0.3 g

Table 7.8

This document, property of MORANE, can not be used or duplicated without prior authorisation

The power spectral density is described below, for the 3 directions **[11]**.

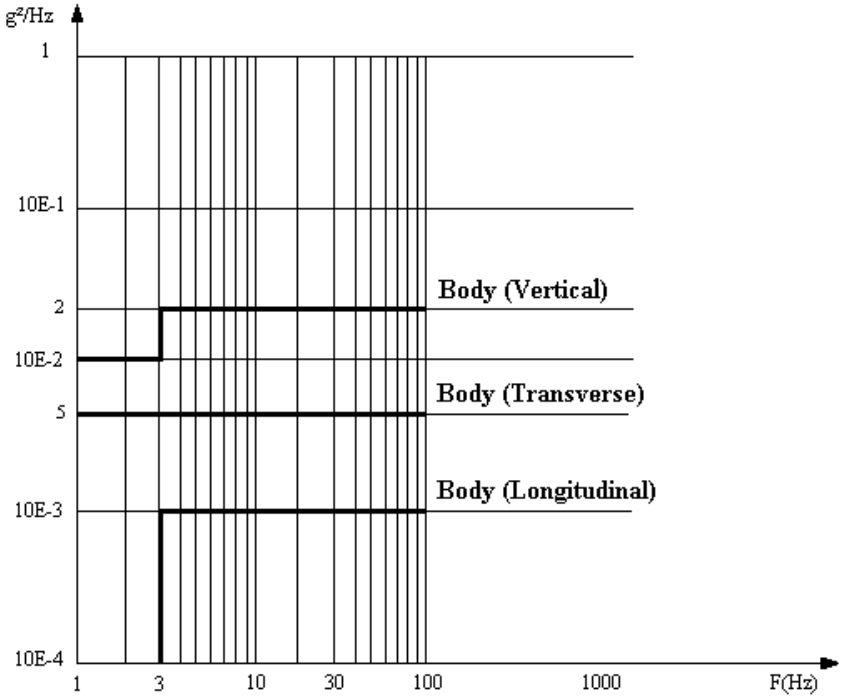

Figure 7.9 - Power spectral density envelope of acceleration recorded on the body

- <u>Fixed equipment</u>

Fixed equipment is subjected to **random vibration** in the 3 axes (vertical, longitudinal and transverse). Equipment is subjected to a total effective acceleration equal to **0.25 g** in the three directions. The power spectral density, for fixed equipment installed on the trackside or in trackside buildings, is given below for each axis.

This document, property of MORANE, can not be used or duplicated without prior authorisation

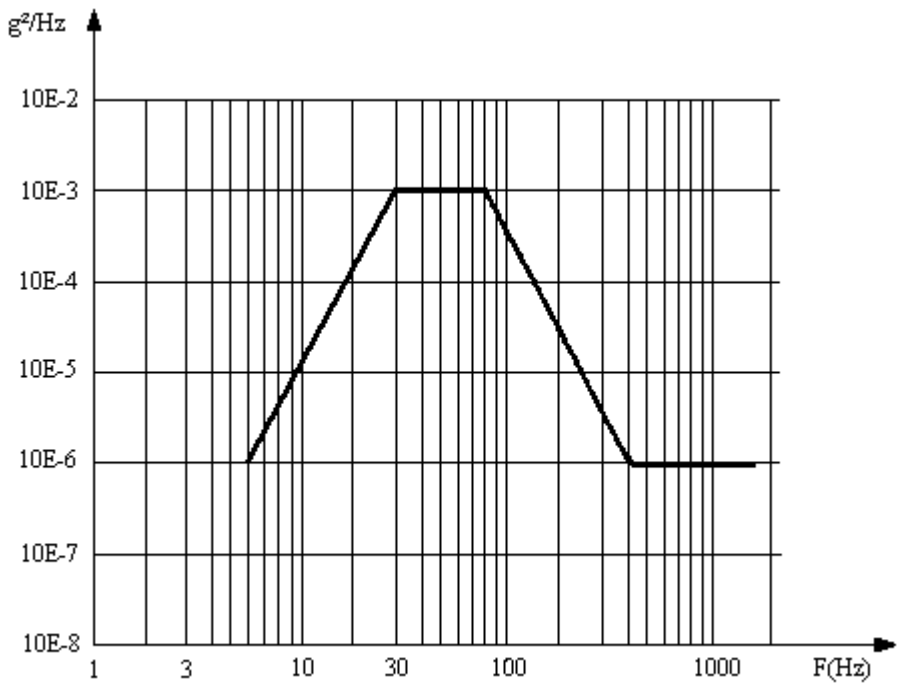

Figure 7.10 - Vertical axis

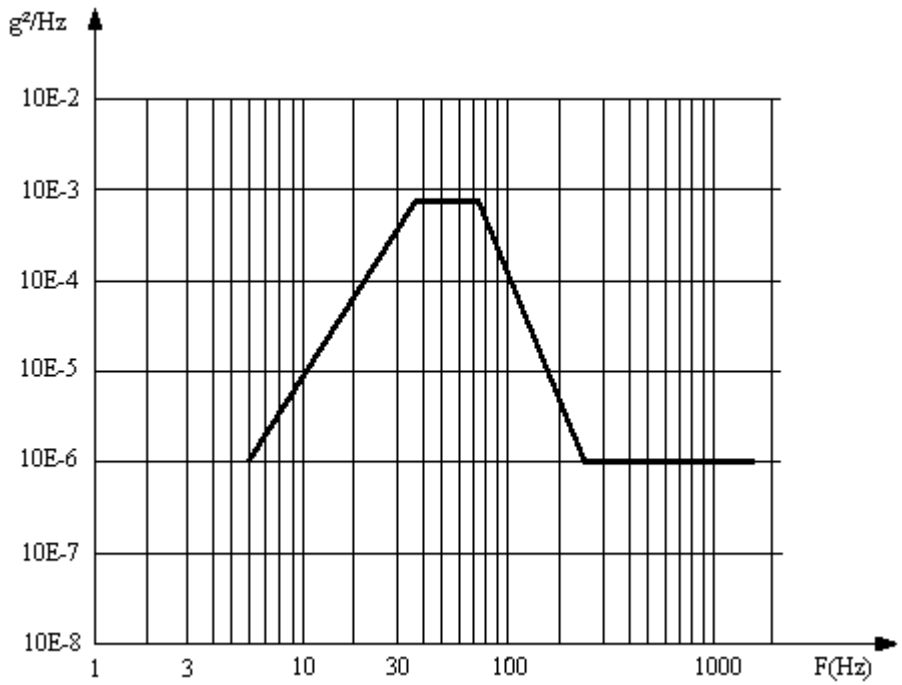

Figure 7.11- Transverse axis

This document, property of MORANE, can not be used or duplicated without prior authorisation

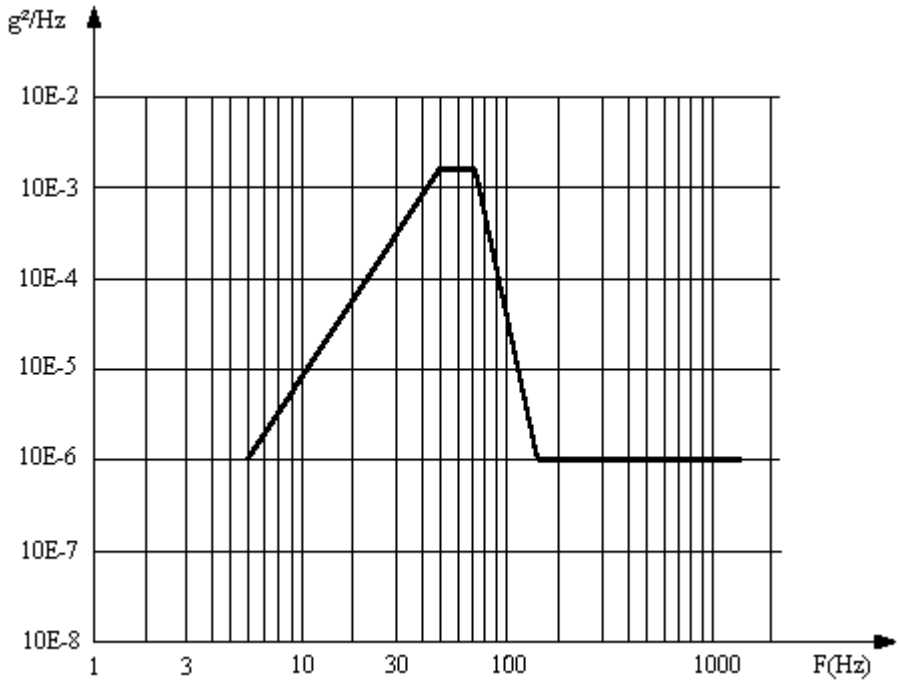

Figure 7.12 - Longitudinal axis

7.3.2. Shocks

- Mobile equipment

Equipment shall be capable of withstanding the shocks described below **[10] [11]**.

	Cab radio + General purpose radio	
	Normal conditions *	**Exceptional conditions ***
Peak acceleration (g)	3	20
Duration of shocks (ms)	100	1

	Operational radio	
	Normal conditions *	**Exceptional conditions ***
Peak acceleration (g)	5	10
Duration of shocks (ms)	100	5

Table 7.13

* The shocks are not repetitive.

Moreover, mobile exterior equipment shall withstand shocks when the vehicle goes up to **500 km/h.**

This document, property of MORANE, can not be used or duplicated without prior authorisation

- Fixed equipment

For each location, the shocks that the fixed equipment shall withstand, are described in the table below **[10] [15]**.

	Peak acceleration (g)		Duration of shocks (ms)
	Normal conditions	**Exceptional conditions**	
Trackside equipment	2	10	1 to 11
Wayside bungalows	2	10	1 to 11
Indoor equipment (in buildings)	No shock		-

Table 7.14

7.3.3. Falls

Mobile equipment (handheld and portable stations) shall be capable of withstanding falls and accidental shocks from a maximum height of 1 m. The characteristics of these falls are described in **[19]**.

7.4. Electrical conditions

7.4.1. Electrical service conditions

7.4.1.1. Power supply

- Mobile equipment

The nominal supply voltage for mobile equipment supplied by an accumulator battery is the voltage specified for that battery.

The nominal values of the primary main supply voltage (d.c.) for mobile equipment shall be selected from among the following values **[10]**. Each railway operator will indicate to the suppliers the voltages used on his network.

d.c. voltage (V)
12, 24, 36, 48, 60, 72, 96, 110, 144

Table 7.15

Electronic equipment can also be supplied by a static converter (direct-direct or direct-alternating).

Moreover, the railway concerned will inform the manufacturer, if one pole of the vehicle's supply is earthed to the frame.

- Fixed equipment

The nominal values of the primary main supply voltage (a.c.) for fixed equipment shall be selected from among the following values **[10]**. Each railway operator will indicate to the suppliers the voltages used on his network.

This document, property of MORANE, can not be used or duplicated without prior authorisation

50 Hz	**3 × 230/400 V** **1 × 230 V** **1 × 127 V** **1 × 110 V**
16 2/3 Hz	**1 × 220 V** **1 × 440 V (2 × 220 V)**

Table 7.16

The available values for the d.c. secondary supply voltage are, in Europe : **12, 24, 36, 48, 60, 72, 144 V**.
It is essential to have an insulation voltage higher than, or equal to, 2000 V between primary and secondary supply voltage.

7.4.1.2. Variations in voltage supply

- Mobile equipment

For mobile equipment, supplied by accumulator batteries, permitted variations in supply voltage are described below **[11]**.

Let "Un" be the nominal supply voltage.

Nominal voltage	Minimal voltage	Maximal voltage	Minimal transient voltage 100 ms	Maximal transient voltage 100 ms
Un	0.7 Un	1.25 Un	0.5 Un	1.6 Un

Table 7.17

For supply voltages **less than 0.6 Un**, all precautions shall be taken to prevent any damage, being caused to electronic equipment, which may adversely affect its subsequent satisfactory operation **[10]**.

Voltage fluctuations **between 0.6 Un and 1.4 Un** (not exceeding 0.1 sec) shall not affect the function of the operating equipment, particularly during start-up of auxiliary equipment and/or possible voltage oscillations of battery chargers. And the system shall be designed such that, at start-up of thermal engines, the supply is guaranteed to essential equipment during the whole starting sequence **[10]**.

Voltage fluctuations **between 1.25 Un and 1.4 Un** (not exceeding 1 sec) shall not cause damage to equipment **[10]**.

Accumulator batteries on charge have a pulsating voltage, the d.c. ripple factor, calculated from the equation below **[11]**.

$$d.c.\ \ ripple\ factor = \frac{Umax - Umin}{Umax + Umin} \times 100$$

where Umax and Umin are the maximum and minimum values of the pulsating voltage.

The equipment shall be capable of withstanding a d.c. ripple factor up to **10 %**.

- Fixed equipment

All fixed equipment shall operate satisfactorily with the nominal voltage variations described in the table below **[10]**. **[15]**.

This document, property of MORANE, can not be used or duplicated without prior authorisation

	Minimum voltage	Maximum voltage
a.c .primary supplying	0.7 Un	1.1 Un
d.c. secondary supplying	0.8 Un	1.3 Un
Frequency : - provided by a public network - provided by a railway network	 - 1 Hz - 4 Hz	 + 1 Hz + 4 Hz

Table 7.18

- Common arrangements

- Protection against short circuits :

The supply source shall be provided with its own protection against short circuits.

- Drop in voltages and over-voltages :

Usually, the most important induced over-voltages are produced by the switching of electric and electronic equipment. Equipment shall be capable of withstanding the effects of signals whose main characteristics are given below **[10] [15]**.

This document, property of MORANE, can not be used or duplicated without prior authorisation

For primary main (a.c.), the following disturbances are relevant.

Drop in voltages	100 %, 3 s PN* 100 %, 3 s RaN*
Over-voltages	20 %, 10 s
Short time interruptions	< 60 s, PN & RaN
Micro power cuts	< 1 s
Unbalanced between positive and negative half cycles	2 % PN 3 % RaN
Total harmonic distortion factor	8 % PN 10 % RaN

Table 7.19

* PN = Public Network
* RaN = Railway Network

- Transients :

The equipment has to respect the European standard IEC 571 for transient effect and prEN 50155 for power supply transient.

7.4.2. Electromagnetic compatibility

Concerning the electromagnetic compatibility, the equipment has to respect at least the following European standards: **IEC 1000-4-1, 1000-4-2, 1000-4-3, 1000-4-4**, the European prestandards: **ENV 50121-1**, **ENV 50121-2**, **ENV 50121-3**, **ENV 50121-4**, **ENV 50121-5** and the GSM reccomendation 05.05 for EM radiation.
The equipment must be compatible, for example, with the items listed below.

Signalling relays and contactors
Power transformers
Track circuits (all types)
Train Describers
Existing radio, VHF and UHF
Radar (portable, for speed measuring)
Switching-mode power supplies
Telecommunication circuits

The sources of electromagnetic interference, against which the equipment must be protected, are listed below :

Lightning
Electric power transmission lines
Electric traction
Automotive noise
Domestic sources (Thermostats, electric drills, microwave ovens, etc.)
Existing public and private networks

The European prestandard ENV 50121-1 gives others examples.

7.4.2.1. Electromagnetic disturbances supported by the equipment

All precautions must be taken to ensure that no malfunction of equipment can result from radiated perturbations.

- <u>Atmospheric discharges</u>

This document, property of MORANE, can not be used or duplicated without prior authorisation

Equipment shall be capable of withstanding the over-voltages shown below.

Magnitude	2000 V
Rise time	1.2 µs
Middle voltage time	50 µs
Internal impedance	33 Ω

Table 7.20

- Magnetic field

Low frequency fields can influence cathode ray tubes. Equipment shall be capable of withstanding intensities, such as **30 A/m** for 50 Hz [17]:

- Electric field

Equipment shall be capable of withstanding the effects of electric fields whose main characteristics are given below.

Range of frequencies	Maximal value
10 kHz to 3 GHz	20 V/m

Table 7.21

Moreover, for each country concerned, the frequency bands occupied by the railway operator will be indicated to the supplier. In these bands, a maximal value of **50 V/M** for the electric field to be withstood by the equipment, has to be taken into account.

- Induced over-voltages in wiring

The equipment has to respect the IEC 1000-4-3 European standard.

- Electrostatic protection

The equipment has to respect the IEC 1000-4-2 European standard.

This document, property of MORANE, can not be used or duplicated without prior authorisation

7.4.2.2. Electromagnetic disturbances generated by the equipment

Under normal operational conditions, equipment (not including antennas) should not generate any disturbances which are able to affect the good running of radio, electronic or electric existing equipment working in the same area.

Disturbances and their maximum admissible levels are described below.

- Electric fields

Equipment shall not generate undesirable electric fields higher than those given in the table below **[16]**.

Frequency range (MHz)	Value (dB µV/m) for a distance of 1 m	Value (dB µV/m) for a distance of 10 m
30 to 230	+56	+30
230 to 1000	+63	+37

Table 7.22

- Magnetic fields

Equipment shall not generate undesirable magnetic fields higher than those given in the table below.

Frequency range	Value (dB µA/m) for a distance of 1 m
50 Hz to 300 Hz	+120 to +80
300 Hz to 10 kHz	+80 to +50
10 kHz to 150 kHz	+46
150 kHz to 1 MHz	+46 to +16
1 MHz to 30 MHz	+16

Table 7.23

- Transmitted perturbations by the equipment in wiring

Limits of disruptive voltage, transmitted by the equipment, to the bounds of the energy network, are given in the table below **[16]**.

Frequency range (MHz)	Maximal value (dB µV)	Average value (dB µV)
0.15 to 0.5	66 to 56	56 to 46
0.5 to 5	56	46
5 to 30	60	50

Table 7.24

Notes : The lower limit is applicable to the transitional frequencies.
The limit decreases in a linear way in respect to the logarithm of the frequency between 0.15 MHz and 0.5 Mhz.

7.5. Material environment

7.5.1. Material damage sources

Gases in an operating environment can cause corrosion. They are, for example, oxygen, water vapour and the pollutant gases (sulphur dioxide, hydrogen sulphide, nitrogen oxides, etc.). Although pollutant gases are normally only present in low concentrations, they can cause significant corrosion and a marked deterioration in the performance of contacts and connectors. So equipment shall be treated against corrosion.

This document, property of MORANE, can not be used or duplicated without prior authorisation

Moreover, **dust**, **sand** and **salt** can have an effect on products in various ways, for example, deterioration of electrical characteristics, surface abrasion, etc.

Other elements which can damage the equipment are **mould**, **smoke** and **fumes**, **iron ore**, **iron dust**, **ballast**, **oil, diesel oil**, **grease**, **fauna** and **flora**.

For equipment installed on the roof of the train, detergent products such as **oxalic acid**, used to clean the trains, can also deteriorate equipment.

Concerning the mobile stations, elements such as **rain**, **violent wind**, **snow**, **frost**, **saline fog**, **sand** and **grease** have a very harmful effect.
Moreover, mobile stations are handled with thick gloves, which can convey sand and grease.

7.5.2. Flammability

The European standards IEC 829 and EN 60695, on flammability, are relevant. However, each railway operator shall indicate if special precautions have to be taken.

7.5.3. Design of equipment

The ref.**[21]** describes the layout of cab equipment.

Mobile equipment installed inside vehicles shall respect some national standards which describe the constraints of shape, size, weight, ventilation, etc., for mobile equipment. The supplier will have to ask the railway operator to supply the respective standards, for the engines which require fitting out.

This document, property of MORANE, can not be used or duplicated without prior authorisation

7.6. Human environment

7.6.1. Battery requirements

- The following battery requirements shall be provided without the use of discontinuous reception or transmission (DTX / DRX). They shall also be met based on full power during transmission and assuming typical periodic location updating.

- For determining battery requirements, the transmit / receive duty cycles used should be as shown in table 7.25, for each call type.

Call type	Transmit	Receive
Point-to-point call	100 %	100 %
Group call	30 %	100 %
Broadcast call (originated)	100 %	100 % *
Broadcast call (receive)	0 %	100 %

Table 7.25

* it is necessary to receive while transmitting a broadcast call since the speaker's link to the network is via a standard point-to-point call.

• Cab radio shall be equipped with an emergency power supply enabling the driver's radio to continue to operate for a period of 6 hours, based on the following cycle ***(5.7.14)*** :

point-to-point calls 20%
group calls 5%
standby 75%

• General purpose radio shall be equipped with rechargeable batteries capable of providing a minimum of 8 hours operation from a single charge, based on the following cycle ***(6.4.5)*** :

point-to-point calls 20%
group calls 5%
standby 75%

• Operational radio shall be equipped with rechargeable batteries capable of providing a minimum of 8 hours operation from a single charge, based on the following cycle ***(7.5.8)*** :

point-to-point calls 20%
group calls 60%
standby 20%

- The replacement of the battery shall be effected easily and without the possibility of inversion. The system of replacement shall also exclude all injury and fall risks.

This document, property of MORANE, can not be used or duplicated without prior authorisation

7.6.2. Additional requirements

a) All mobile equipment shall conform to EN 60950 (Safety of Information Technology Equipment), including Electrical Business Equipment, 1993, plus amendments A1 and A2. In addition, all design, manufacturing, testing and installation of mobile radio equipment shall comply with the quality procedures defined in ISO 9001. The strap and carrying case of the portable are to be made from a light and impermeable material, with a dye which does not come out when in contact with rain or perspiration. Moreover, it shall not cause an allergic reaction when in contact with the skin **[1]**.

b) Measures are to be taken to reduce the risk of theft of radio equipment, where the risk is significant, (e.g., at unmanned trackside locations, passenger stations, and on trains). Examples of such measures include: physical protection, alarms and access control **[1]**.

c) The ease of maintenance is to be taken into account in the design and installation of radio equipment.

d) For the cab radio the "subscriber identification and authorisation card" (SIM card) shall be physically integrated and shall not be removable, except by authorised maintenance staff **[1]**.

e) The environmental tolerance of the mobile radio units shall be tested in accordance with EN 45001. All EMC emission and immunity tests shall be performed in accordance with EN 61000-4 and EN 50140. Environmental testing procedures shall follow IEC 68

This document, property of MORANE, can not be used or duplicated without prior authorisation

8. Performance Specification

8.1. Scope of performance specification in MORANE SSRS

System performance is described by an appropriate choice of figures of merit, which are relevant in terms of satisfactory service received, by the users of the system. Sometimes, the term „quality of service“ is also used to denote those performance parameters which are particularly perceived by the users.
The main performance requirements seen from the user side are provided in [1] and [2] which are the guideline for the MORANE SSRS. Other performance values are presented in this chapter. However, performance issues of the MORANE networks are considered as being the responsibility of the individual operators. In fact, there may be different performance requirements, depending on the choice of options required within GSM-R, its usage and on the individual service goals of railway operators. The technical performance prerequisites (as for example radio coverage, network dimensioning etc.) are, in any case, the operator’s responsibility.

As MORANE is essentially based on GSM phase 2+, the performance of the MORANE system is in line with the recommendations and specifications of the GSM standards. The basic concepts and terminology, together with recommended values for performance figures, of the GSM network have been drafted in **[22]**, and reported in **[23]**. In these documents, the reader will also find references to the underlying ITU recommendations.

The performance specification in the MORANE SSRS will aim at providing a detailed summary and some additional information on the recommendations for railway operation, mainly under the following two aspects:

- to point out and explain the standard performance issues which are of particular importance for railway use,

- to define modified performance requirements (which are more stringent or more detailed than the standard ones), where necessary.

The description will be guided by the distinctive requirements of railway applications as, for example, ERTMS or emergencies.

This document, property of MORANE, can not be used or duplicated without prior authorisation

8.2. Railway relevant performance aspects

8.2.1. Radio link performance

8.2.1.1. Railway application aspects concerning radio link performance

ERTMS and other railway applications (mainly those which are used within security or emergency concepts) have, or tend to have, more stringent performance requirements than normal public GSM telephony. As a consequence, for railway usage, the system may require higher availability than is normally demanded from GSM.

There are other peculiarities in railway applications which necessitate special consideration within the performance specification:

- the high speed of the MS's (> 350 km/h today and up to 500 km/h in the long term)
- the specific radio wave propagation environment (in tunnels and cuttings)
- specific events: the MS's passing close to BTS's (the Doppler effect due to high speed and receive levels at the overload boundary), trains passing each other in tunnels or cuttings (which will also impact upon the radio wave propagation path)

Other specific performance requirements (which are currently not relevant to public telephony) may be stated, if the following service options are chosen

- the use of signalling channels for transmission of railway relevant user information (e.g. user-to-user signalling)

- the routing of train-to-ground calls, to location dependent destinations, by means of the originating cell: this imposes performance requirements for cell selection and re-selection by MS's (see sect. 8.2.1.4)

- GSM phase 2+ (ASCI) based services (for further study)

8.2.1.2. Radio coverage

The requirements on radio coverage are defined in [2]. More stringent requirements can be decided on a national basis.

8.2.1.3. Radio traffic estimations

MORANE point-to-point communications, as currently expected, will consist primarily of frequent, but short, voice communications between operational personnel, or different kinds of data transmission, including extensive data transmission for ERTMS. Point-to-multipoint and broadcast communications are expected to be mainly voice communications of longer duration.

The traffic models for railway communications can be derived from user scenarios nationally defined.. Statistics of data connections for ERTMS will depend on applied ERTMS Levels and on the (finally chosen) mode of transmission. This may range from packet transmission to continuous data connection throughout the train's journey. A detailed study on applicability of GPRS to ERTMS is given in [7].

This document, property of MORANE, can not be used or duplicated without prior authorisation

8.2.1.4. Railway relevant radio link performance figures

The following radio link performance items imply functionality on both sides of the radio air interface.

- call success rate

Call success rate is defined as the percentage of radio link set-up attempts, where a criterion for a successful connection (including specified end-to-end performance - see sect. 8.2.2) has been achieved. Regarding call success rate as a radio link performance item implies that, the contribution of switching components towards unsuccessful call set-up is negligible.

A successful connection criterion, which is used in public GSM network assessments for example, is a connection with good quality for at least 2 minutes. Due to the fact that for railway operators the option of user-to-user signalling in the call set-up is used, an alternative successful call criterion is a shorter duration of connection, e.g. 1 minute.

The call success rate should be at least 95 %.

- connection loss rate

For ERTMS applications using continuous connection between the MS and RBC's, the probability of connection loss, during the train journey, is an important performance parameter. It may be measured by the number of retrials necessary (after call drop-out) per hour of connection time. Loss of connection due to unsuccessful handovers shall not be counted. Regarding connection loss rate as a radio link performance item implies that, the contribution of switching components towards connection loss is negligible.

Recommended value of connection loss rate is to be defined

- handover execution time

Due to the importance of short interruption times during radio link handover, if moving from one cell to another, **[2]** provides the definition and a time requirement (300ms) for the handover execution time.

- handover success rate

The handover success rate is defined as: the percentage of successful handovers related to the total numbers of handovers. A handover may be considered successful, if the burst error performance during handover according to 8.2.2.3 is achieved and if there is error free data transmission for at least 10 sec subsequent to handover.

[2] recommends 99.5% handover success rate.

- Cell selection and re-selection performance

A straight forward solution (provided by GSM) to the task of automatic routing of mobile originating calls to location dependent destinations, is the usage of the cell dependent routing facilities. In voice broadcast or group calls, one constituent of the group identification is the addressing of selected cells.

This requires that idle MS's camp-on (with a sufficient probability) to that radio cell (associated to the geographically defined area) which should encompass the position of the mobile. A corresponding requirement holds for MS's in dedicated mode: they should perform a handover (with sufficient probability) into the (geographically determined) neighbouring cell.

This document, property of MORANE, can not be used or duplicated without prior authorisation

In case of availability of location information from an external location system an exact location determination is possible. This location information has to be processed by an application, which provides a corresponding functional number to be send to the network during MOC setup procedure (see chapter 5.2).

8.2.2. End-to-end performance

The following sections deals with performance items which are mainly affected by the radio parts of the MORANE system, but may also be affected by other network components. These items are described in terms of end-to-end behaviour, which means including MS and NSS behaviour, but may also include ISDN or PSTN behaviour, if applicable.

8.2.2.1. Call set-up time

The call set up time is defined in **[13].** The documents [1][2] define the requirements on call set up times.

It should be noted, that the set-up of data channels may need up to one additional second for end-to-end synchronisation in case of unrestricted digital transmission (ISDN). If modems are involved, this time may be even longer.

This document, property of MORANE, can not be used or duplicated without prior authorisation

8.2.2.2. TCH transmission delay

- speech channels

A one-way delay of approx. 90 ms within the GSM-R path (between external ports of MS and MSC, respectively) is considered a network design objective **[23]**

- transparent data channels

Worst case delay figures for all types of GSM data channels can be derived from data given in **[23]**. In general, there are slightly different delays in the uplink and downlink.

As a preliminary performance guideline, for the purpose of the MORANE SSRS, it is proposed to choose a single delay figure per channel type, for which, the worst of each of the reported results is taken:

GSM data channel type	delay performance guideline (ms)
TCH/F9.6	222
TCH/F4.8	244
TCH/F2.4	179
TCH/H4.8	340
TCH/H2.4	344

8.2.2.3. Bit error performance in transparent data channels

Investigators of end-to-end bit error performance in MORANE networks must be aware of two completely different error mechanisms at the radio interface:

During handover of data connections (in a running train) from one radio cell to another , there will be a certain number of bits which will be wrong or get lost. This is a systematic error performance and, therefore, it is predictable, and will depend on the train speed and number of radio cells traversed during a connection.

In the intervals uninterrupted by handover, error performance in the radio part is determined by radio wave propagation and noise interference. In this case, it is possible that radio propagation conditions are so good, that the fixed network parts of the connection can also contribute to the end-to-end bit error rate.

Therefore, handover originated bit error performance should be distinguished from the propagation and noise induced error performance. An average bit error rate for handover-free intervals and burst error performance during intervals of handover execution will be specified.

- average bit error rate in handover-free intervals

It is assumed that the worst case of bit error rate in handover-free intervals is solely determined by the characteristics of the radio part. Reference bit error rate performance data, for various propagation conditions, are given in **[24].**
As a preliminary performance guideline for the purpose of the MORANE SSRS, it is proposed to choose one of the reference interference performance models with a fairly good predicted error performance. This

This document, property of MORANE, can not be used or duplicated without prior authorisation

choice takes into account, that the propagation conditions along railway tracks (using directional antennas) may tend to be fairly good, on average, due to the high proportion of direct path propagation. The following table presents the BER reference interference performance according to **[24]** with the RA250 propagation model and no frequency hopping:

GSM data channel Type	bit error rate performance guideline for handover-free intervals
TCH/F2.4	10 -5
TCH/F4.8	10 -4
TCH/H2.4	10 -4
TCH/H4.8	2x 10 -3
TCH/F9.6	2x 10 -3

The propagation model chosen above may not be applicable in railway station environments, suburban trains, etc.

- burst error performance during handover

In the handover process, a number of original data bits will be lost. The GSM base station subsystem could replace an arbitrary number of the lost bits (equal to or less than the original number of bits) by random bits, or it could insert more random bits than the number of lost original bits.

This document, property of MORANE, can not be used or duplicated without prior authorisation