Author	Date	REFERENCE	
MORANE	31 July 2000	F 12 T 6003 3	
Name of WP/Activity WP 22: Review of Functional Interface Specification			**Contract:DGVII** **WP/ACT:**
Company/organization MORANE		**Team**	**MORANE** **WP/ACTIV: 22**

FIS FOR

PRESENTATION OF FUNCTIONAL NUMBERS TO CALLED AND CALLING PARTIES

ACCESS : ☑ Public ❒ Restricted ❒ Confidential

	NAME	DATE	VISA
Author	MORANE	17 May 2000	WP 22 members
Reviewed	MORANE PMT	18 May 2000	PMT
Approval	R. Sarfati	31 July 2000	

EVOLUTION SHEET

Version	Date	Author	MODIFICATION
A	20/09/96	AMC	Creation
1	25/09/96	AMC	First approved version
2	11/08/96	AMC	Definition of an empty User-User IE (last page) Editorial changes
3	31/07/00	MORANE	Specification review third issue

TABLE OF CONTENTS

1. SCOPE _____ *4*

2. NORMATIVE REFERENCES _____ *4*

3. ABBREVIATIONS _____ *5*

4. INTERFACE DESCRIPTION _____ *6*

5. MESSAGE FUNCTIONAL DEFINITION AND CONTENTS _____ *7*

1. SCOPE

This Functional Interface Specification (FIS) specifies the GSM-R interface requirements involved in the realisation of the GSM-R feature *Presentation of functional numbers to called and calling parties*.

2. NORMATIVE REFERENCES

[1] MORANE SSRS A 04/02 T 6002

[2] MORANE FFFS Functional Addressing E 10 T 6001

[3] MORANE FFFS Presentation of functional numbers to called and calling parties F 10 T 6003

[4] 3GPP TS 24.087 3.0.0 User-to-User Signalling (UUS) - Stage 3

[5] 3GPP TS 24.008 3.3.0 Mobile radio interface layer 3 specification, Core Network Protocols - Stage 3.

[6] MORANE “Usage of the UUIE in the GSM-R environment”, Ref. H22T0001 1

3. ABBREVIATIONS

BSS	Base Station System
CTRLFN	Controller Functional Number
FNUT	Fixed Network User Terminal
GMSC	Gateway MSC
GSM	Global System for Mobile Communications
GSM-R	GSM Railways
ISDN	Integrated Service Digital Network
MMI	Man Machine Interface
MOC	Mobile Originating Call
MSC	Mobile Switching Centre
MS	Mobile Station
MSISDN	Mobile Station ISDN Number
MT	Mobile Termination
MTC	Mobile Terminating Call
PABX	Private Automatic Branch eXchange
SIM	Subscriber Identity Module
SM	Short Message
TFN	Train Functional Number
UUS1	User to User Signalling Service 1
VLR	Visitor Location Register

4. INTERFACE DESCRIPTION

As described in [3] the User-to-User Signalling service 1 (UUS1) will be used to realize this GSM-R functionality.

This FIS describes the special requirements for this GSM-R functionality on the A and U_m interface.

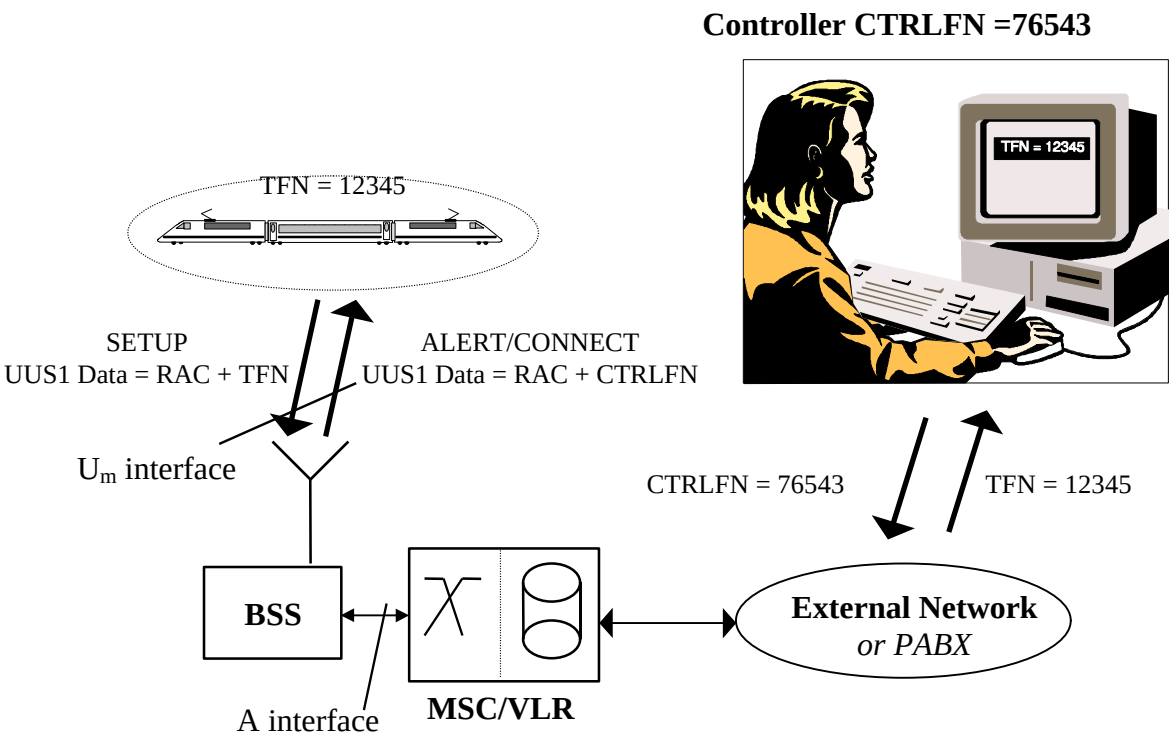

Figure 1: General architecture

Note: The controller may be connected as well to the MSC via a PABX.
The EIRENE functional number is containing the RAC

For the Interfaces involved no special requirements are necessary because normal call setup procedures are used to implement this feature.

5. MESSAGE FUNCTIONAL DEFINITION AND CONTENTS

In the scenario below the messages on the A and U_m interface are identified, that are used to carry the information necessary for presentation of the functional numbers.

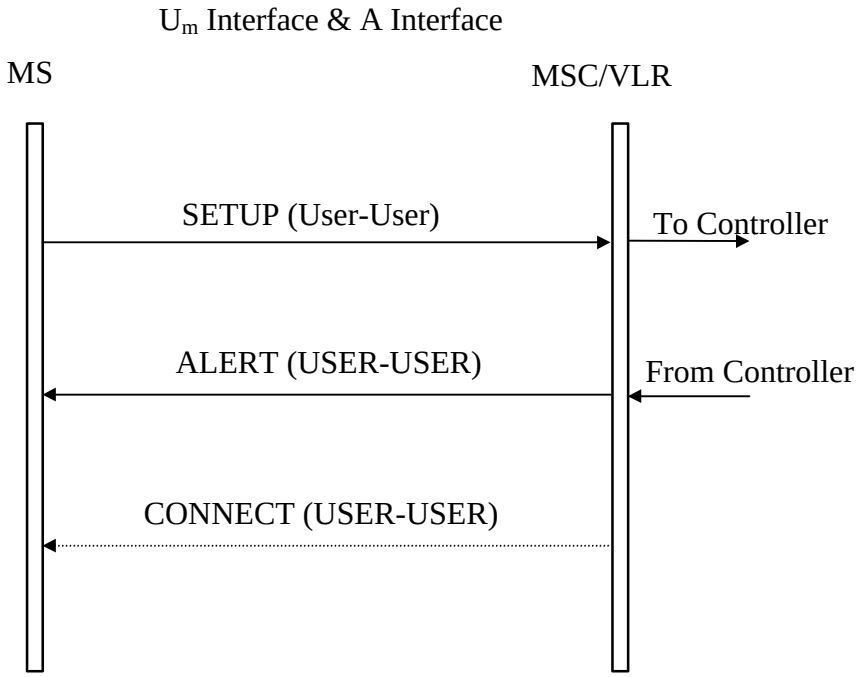

Figure 2: General Message Flow

NOTE: This message flow only shows as an example the transfer of messages from train to the controller. From controller to train it is vice versa.

When initiating the call the calling party has to provide the user-to-user information embedded in the SETUP message containing its functional number. The network has to transfer this user-to-user information transparently embedded in the setup signalling to the called party.

The called party might send an ALERT message or even CONNECT message if no ALERT is to be sent due to an automatic answering mechanism. These messages are used to provide the functional number inside the user-to-user information. The network has to transfer this user-to-user information transparently embedded in the alert/connect procedure towards the calling party.

The SETUP, ALERT or CONNECT message contain a User-User information element according GSM 04.08. This User-User information element is used for the transfer of the own functional number towards the called party and vice versa. The structure of functional numbers follow the EIRENE numbering plan.

For format and encoding of the UUIE for Presentation of Functional Number reference [6] MORANE Usage of the UUIE in the GSM-R environment.