Author	Date	REFERENCE	
MORANE	31 July 2000	F 10 T 6003 3	
Name of WP/Activity WP 22: Review of Form Fit Functional Specification			**Contract:** **WP/ACT:**
Company/organization MORANE		**Team**	**MORANE** **WP/ACTIV: 22**

FFFS FOR

PRESENTATION OF FUNCTIONAL NUMBERS TO CALLED AND CALLING PARTIES

ACCESS : ☑Public ☐Restricted ☐Confidential

	NAME	DATE	VISA
Author	MORANE	17 May 2000	WP 22 members
Reviewed	MORANE PMT	18 May 2000	PMT
Approval	R. Sarfati	31 July 2000	

EVOLUTION SHEET

Version	Date	Author	MODIFICATION
A	27/08/1996	AMC	Creation
B	20/09/1996	AMC	Editorial changes
1	25/09/1996	AMC	First approved version
1A	28/04/1997	AMC	Implementation of Stage 3 description
2	11/08/1997	AMC	New chapter 8 New paragraph at the end of chapter 7
3	31/07/2000	MORANE	Specification review of third issue

TABLE OF CONTENTS

1. SCOPE ____ *4*

2. NORMATIVE REFERENCES ____ *4*

3. ABBREVIATIONS ____ *5*

4. MAIN CONCEPTS ____ *6*

5. GENERAL ARCHITECTURE ____ *6*

6. OVERVIEW OF SIGNALLING ____ *7*

7. FUNCTIONAL MESSAGE DEFINITION ____ *10*

8. INTERACTION WITH OTHER GSM SUPPLEMENTARY SERVICES ____ *10*

9. NORMAL OPERATION WITH SUCCESSFUL OUTCOME ____ *10*

10. EXCEPTIONAL PROCEDURES OR UNSUCCESSFUL OUTCOME ____ *11*

11. FUNCTIONAL DESCRIPTION USING SDL DIAGRAMS ____ *11*

11.1. Structure of functions ____ **11**

11.2. Channels to the environment ____ **11**

11.3. Signals ____ **12**

12. SDL DIAGRAMS ____ *13*

1. SCOPE

This Form Fit Functional Specification (FFFS) specifies the functions required from the GSM-R network for the presentation of functional numbers to called and calling parties during normal call setup.

The presentation of functional numbers ensures a visual information about the destination to the calling subscriber and originator to the called subscriber. The functional numbers have to be interpreted by the MMI applications of called and calling party and the appropriate information has to be displayed.

The functional numbers are structured and unequivocally assigned. E.g. train functional numbers themselves already provide detailed information about the train and do not require additional interpretation.

Therefore, data base applications in charge of the textual interpretation of numbers are not considered in this specification.

2. NORMATIVE REFERENCES

[1] MORANE SSRS A 04/02 T 6002
[2] MORANE FFFS for Functional Addressing E 10 T 6001
[3] MORANE FIS for presentation of functional numbers to called and calling parties F 12 T 6003
[4] 3GPP TS 24.087 3.0.0 User-to-User Signalling (UUS) - Stage 3
[5] 3GPP TS 24.007 3.3.0 Mobile Radio Interface Signalling Layer 3 - General Aspects
[6] 3GPP TS 24.008 3.3.0 Mobile radio interface layer 3 specification, Core Network Protocols - Stage 3.
[7] ITU Recommendation Z.100: Specification and Description Language
[8] 3GPP TS 24.083 3.0.0 Call Waiting (CW) and Call Hold (HOLD) Supplementary Service - Stage 3
[9] MORANE “Usage of the UUIE in the GSM-R Environment”, Ref H 22 T 0001
[10] MORANE “GSM-R SIM card specification”, Ref.: P38 T 9001

3. ABBREVIATIONS

BSS	Base Station System
CTRLFN	Controller Functional Number
CLIP	Calling Line Identity Presentation
CoLP	Connected Line identification Presentation
FNUT	Fixed Network User Terminal
GMSC	Gateway MSC
GSM	Global System for Mobile Communications
GSM-R	GSM Rail
ISDN	Integrated Service Digital Network
MMI	Man Machine Interface
MOC	Mobile Originating Call
MS	Mobile Subscriber
MSC	Mobile Switching Centre
MSISDN	Mobile Station ISDN Number
MT	Mobile Termination
MTC	Mobile Terminating Call
PABX	Private Automatic Branch eXchange
SIM	Subscriber Identity Module
SM	Short Message
TFN	Train Functional Number
UUS1	User to User Signalling Service 1
VLR	Visitor Location Register

4. MAIN CONCEPTS

For normal calls in the GSM-R network trains and controllers may be called by using functional numbers instead of real MSISDN numbers. These functional numbers might be activated by the Follow-me service. The EIRENE functional number is containing the RAC. Refer to FFFS *Functional Addressing*.

However functional numbers activated by the Follow-me service cannot be presented using the GSM supplementary services CLIP and COLP because these are network services and only allow the presentation of the physical MSISDN addresses the functional numbers have been translated to.

The functional numbers activated by the Follow-me service have to be included in standard GSM transport mechanism that support a transparent end-to-end information transfer. This is realized by using the end-to-end supplementary service UUS1. An indication shall be stored in the MMI that the Follow-me service is activated to trigger the use of UUS1.

Otherwise if no Follow-me service is activated the standard supplementary services CLIP and COLP have to be used to realize the visual presentation of these numbers.

In this specification only the presentation of functional numbers to called and calling parties by using the supplementary service UUS1 is described. The supplementary services CLIP and COLP are not explained in this document. For details refer to the GSM recommendations.

5. GENERAL ARCHITECTURE

When initiating the call the calling party has to provide the user-to-user information embedded in the SETUP message containing its functional number. The network has to transfer this user-to-user information transparently embedded in the setup signalling towards the called party.

If there are more than one functional number forwarded to one MSISDN (several functional numbers per train) the application on the MS will use the latest successfully registered functional number (Ref. [10]). The selected number will be packed inside the UUS1 data.

The called party might send an ALERT message or even CONNECT message if no ALERT is to be sent due to an automatic answering mechanism. These messages are used to provide the functional number inside the user-to-user information. The network has to transfer this user-to-user information transparently embedded in the alert/connect procedure towards the calling party.

The scenario mentioned above ensures that the functional number of the calling party reaches the destination during setup procedure and that the number of the called party will be send back to the originator of the call in the alerting/connecting phase. It is required on both sides for the MMI to be able to interpret the received user-to-user information and display the appropriate information on the screen.

Figure 1 shows an example of a MOC transferring the TFN inside the UUS1 data of a SETUP message and receiving the CTRLFN inside the UUS1 data of an ALERT/CONNECT message.

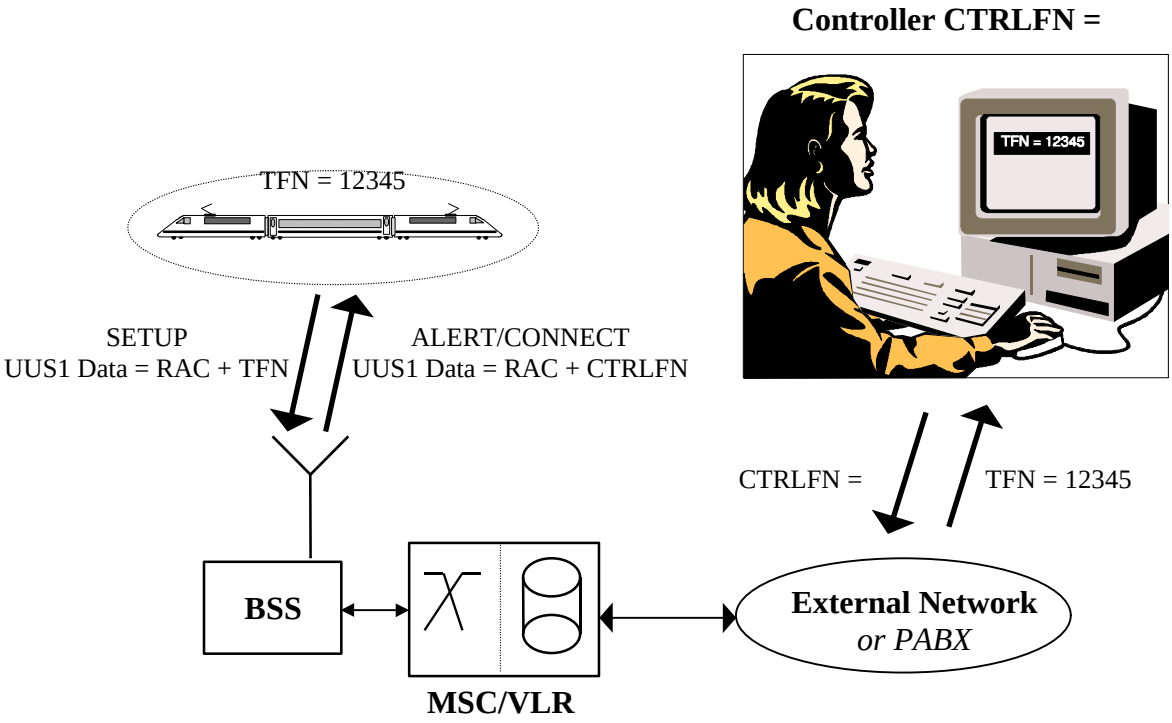

Figure 1: General architecture

Note: The controller may be connected as well to the MSC via a PABX.
The EIRENE functional number is containing the RAC

6. OVERVIEW OF SIGNALLING

In this overview the two scenarios are shown that are necessary to provide the functionality of presentation of functional numbers during a MOC and MTC. Figure 2 shows the message scenario for a mobile originating call and figure 3 shows the scenario of a mobile terminating call. The channel request and authentication as well as the ciphering procedures are not mentioned in these charts. The messages transferring the UUS1 data including the functional numbers (SETUP & ALERT/CONNECT) are printed in bold letters.

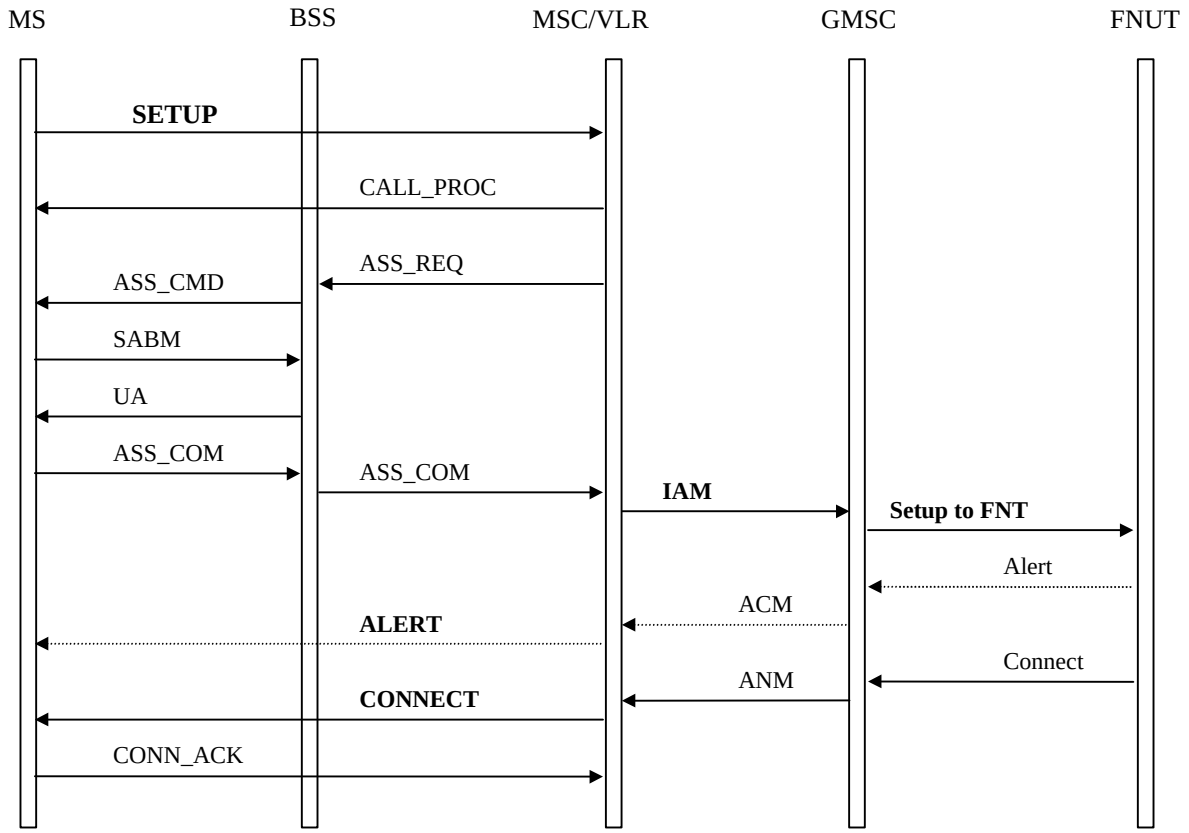

Figure 2: Signalling flow for a mobile originating call

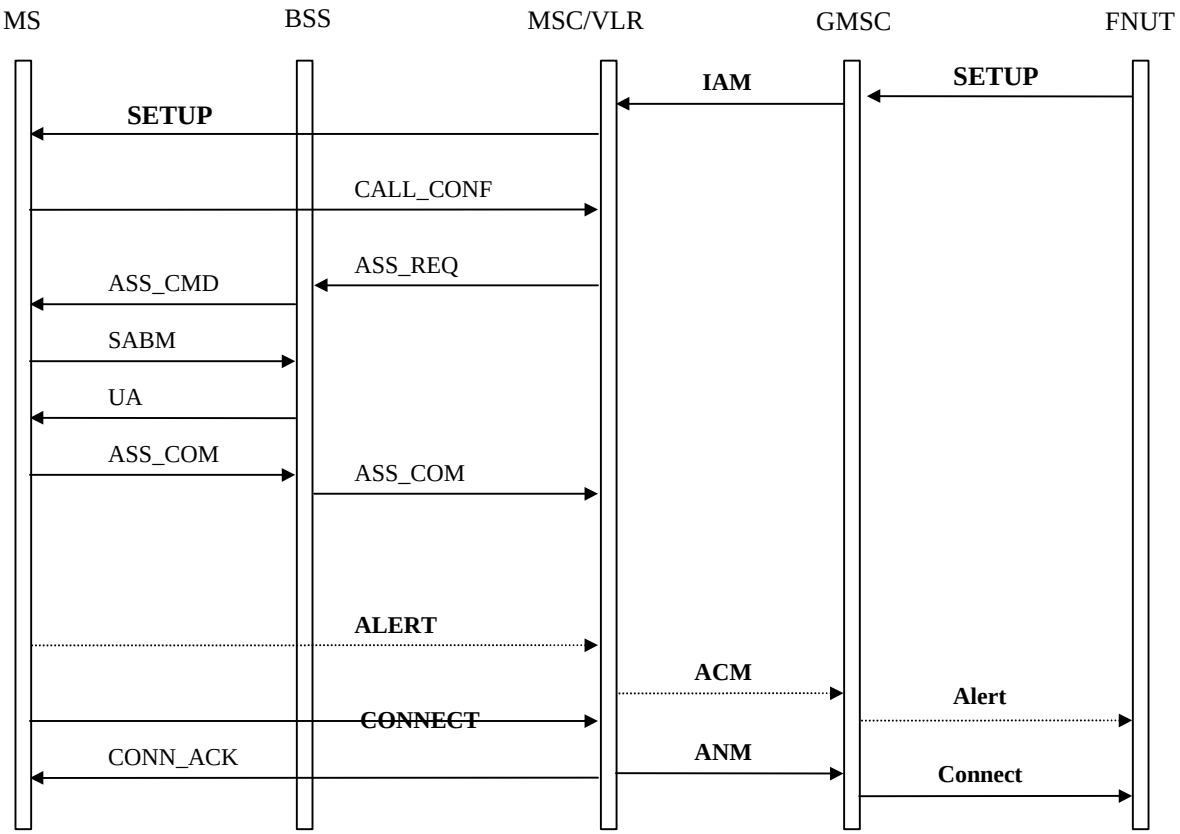

Figure 3: Signalling flow for a mobile terminating call

7. FUNCTIONAL MESSAGE DEFINITION

The SETUP and the ALERT message contain a User-User information element (optional) according [6] used for the transfer of the functional numbers towards the recipient of the message. If an ALERT message is present in a call setup scenario, it shall contain a User-User information for presentation of functional numbers. A following CONNECT message may also contain the **same** User-User information as the ALERT message. In case of automatic answering (no ALERT message) the CONNECT message has to provide the appropriate User-User information. The receiving terminal always displays the functional number according to the last received User-User information contained in an ALERT or CONNECT message.
This implicitly invokes the UUS1 supplementary service. Despite the supplementary service UUS1 should be activated for all SIMs used on cab radios by default.
The SETUP message from the originating subscriber shall always contain a User-User information element to support the network implementation which requires a User-User information element in the SETUP message to activate the UUS1 supplementary service.
Please note: The structure of the functional number follows the EIRENE numbering plan.

8. INTERACTION WITH OTHER GSM SUPPLEMENTARY SERVICES

If the supplementary services *CLIP* and/or *COLP* are implemented and activated, the mobile stations and the fixed network user terminals shall display the numbers provided by CLIP and COLP in case of absence of valid User-User information. Mobile stations and fixed network user terminals may also display the numbers provided by CLIP and COLP in addition to the functional number provided by UUS1. But in any case the display shall provide for each number an indicator if it is a functional number or not.

9. NORMAL OPERATION WITH SUCCESSFUL OUTCOME

The User-to-User information is transferred transparently embedded in the signalling messages between mobile subscribers and/or fixed network user terminals (controller). The called party will interpret the information received from the calling party inside the SETUP message and the calling party will interpret the information received from the called party inside the ALERT or CONNECT message. The appropriate number has to be displayed on the corresponding MMI.
If an external network is used, it has to support the transfer of user-to-user information.

10. EXCEPTIONAL PROCEDURES OR UNSUCCESSFUL OUTCOME

If there is no FN or no UUIE in the call establishment messages, no indications displayed on the MMI.

11. FUNCTIONAL DESCRIPTION USING SDL DIAGRAMS

SDL is used to specify the application behaviour that is represented by the model. The model does not represent necessarily the structure of the application.
The service access points (SAP) according [5] provide access to call control services relevant for the presentation of functional numbers:

- MOC and MTC establishment for normal calls
- Call related supplementary services (Call Wait , Call Hold, UUS1)
- Call Termination

11.1. Structure of functions

According SDL conventions [7] an environment for the system to be specified has to be defined. For the railway applications a channel to the MMI and a channel to an instance controlling the access to the SAPs (mobile network layer MN) according [5] is assumed. Each railway function can be represented by a functional block (PresFuncNum).

11.2. Channels to the environment

The channel to the MMI is assumed as unidirectional. This means no acknowledgement to PresFuncNum is given by the MMI. This is not necessary, because such an acknowledgement would not change the behaviour of PresFuncNum. The proper handling of display requests is the task of the MMI. If the MMI does not receive any display requests from PresFuncNum after reaching the connected state, it shall indicate the absence of a functional number in an appropriate manner.

A proper operation of the mobile network layer is assumed. The call reference CR provides an univocal identification of the calls currently managed in the mobile network layer.
Signals containing an inconsistent CR value are not possible, if the mobile network layer controls call controls scenarios according [6]. PresFuncNum ignores signals with inconsistent CR values (consistency check is not indicated in SDL diagrams).

11.3. Signals

The signals from the environment to the block PresFuncNum on channel CH_MN are directly related to the reception and sending of corresponding call control messages.

Signal	**Call control layer 3 message**
UUS_REQ	SETUP(MOC), ALERT(MTC), CONNECT(MTC)
UUS_IND	SETUP(MTC), ALERT(MOC), CONNECT(MOC)

PresFuncNum is always called with UUS_REQ by the mobile network layer before sending a corresponding layer 3 message.
On reception of every corresponding layer 3 message containing a UUS information element UUS_IND is used to trigger the extraction of the functional number.

PressFuncNum administrates the calls to be handled by using a call reference (CR) provided by the mobile network layer in the signals towards PressFuncNum. The administration is done by updating a Call-List, which provides the relationship between call reference CR and the functional number FN to be displayed.

12. SDL DIAGRAMS

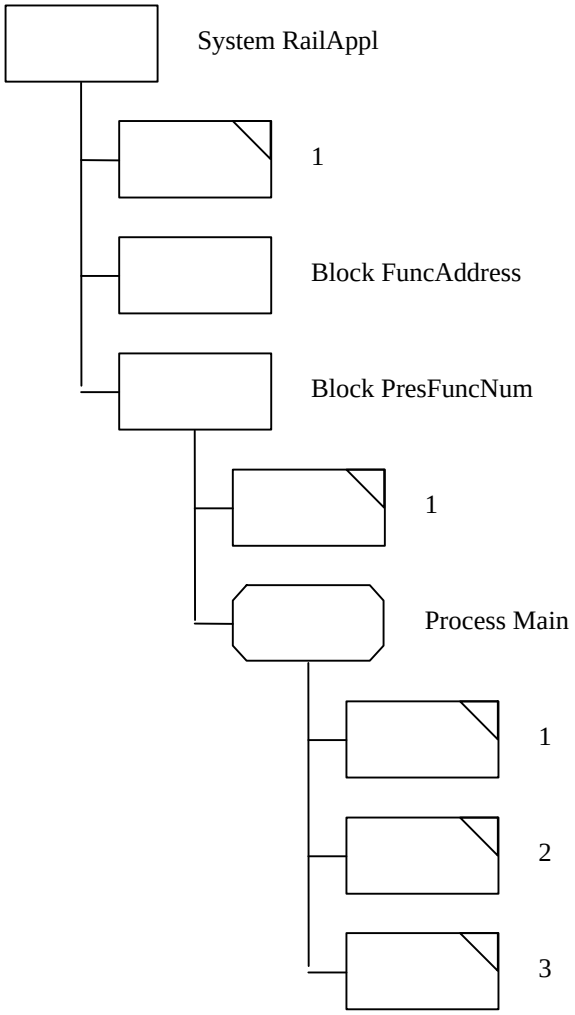

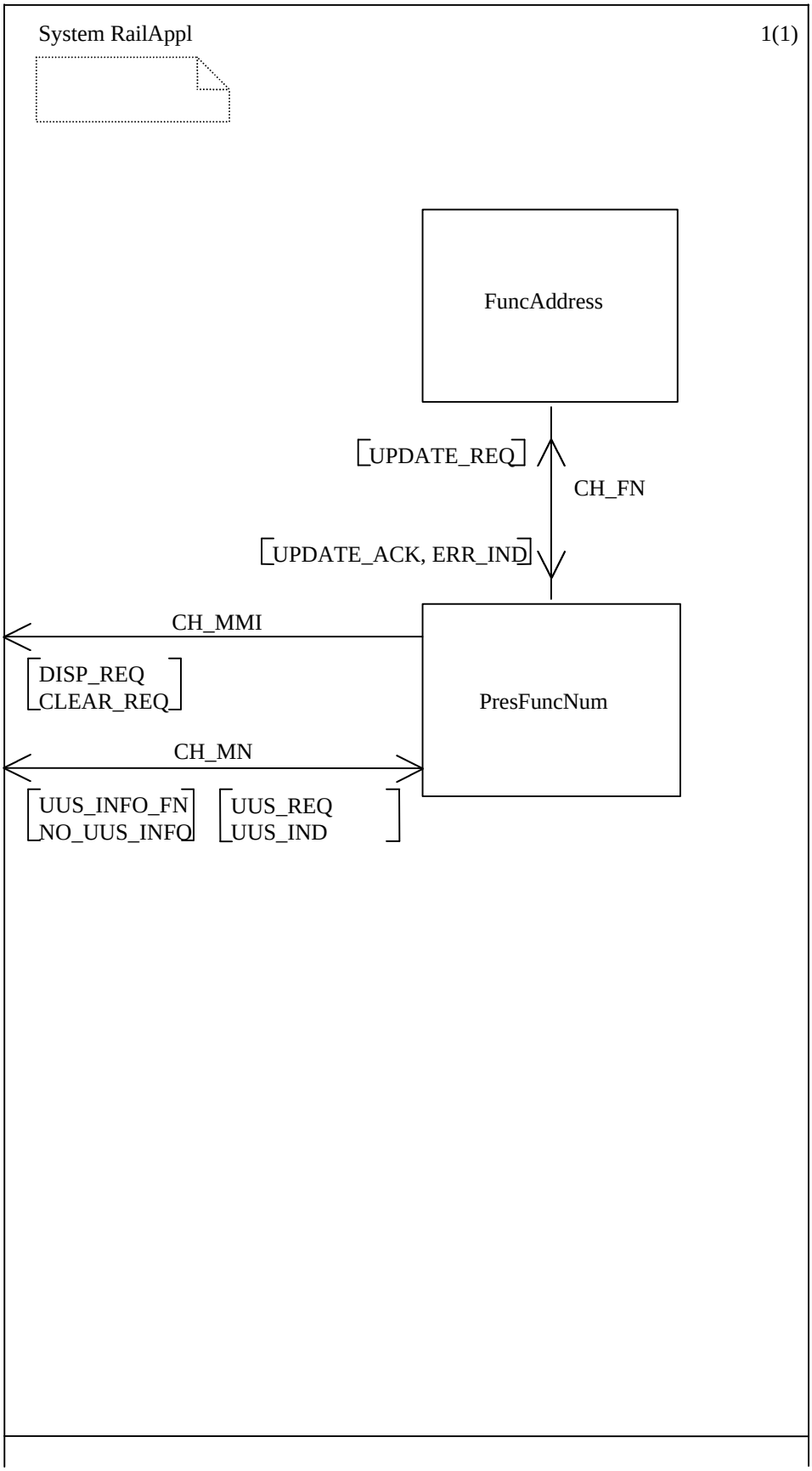
System RailApPl
1(1)
FuncAddress
UPDATE_REQ
CH_FN
UPDATE_ACK, ERR_IND
CH_MMI
DISP_REQ
CLEAR_REQ
PresFuncNum
CH_MN
UUS_INFO_FN
NO_UUS_INFO
UUS_REQ
UUS_IND

Block PresFuncNum 1(1)

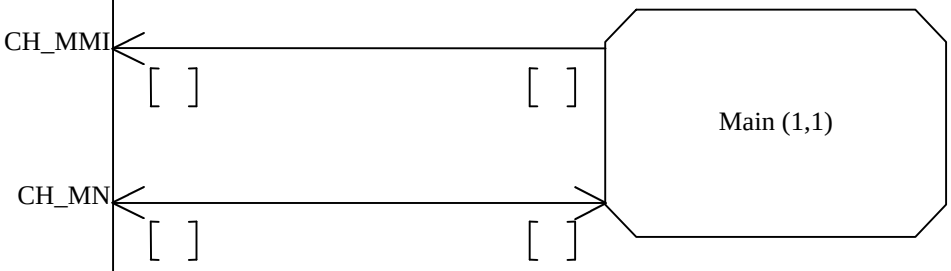

Process Main 1(2)

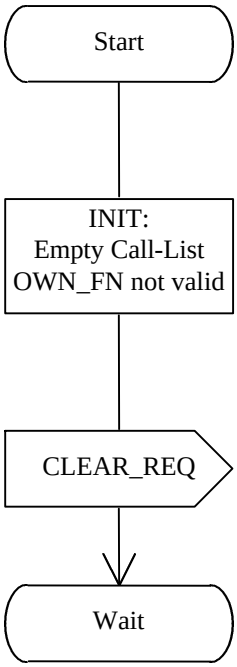

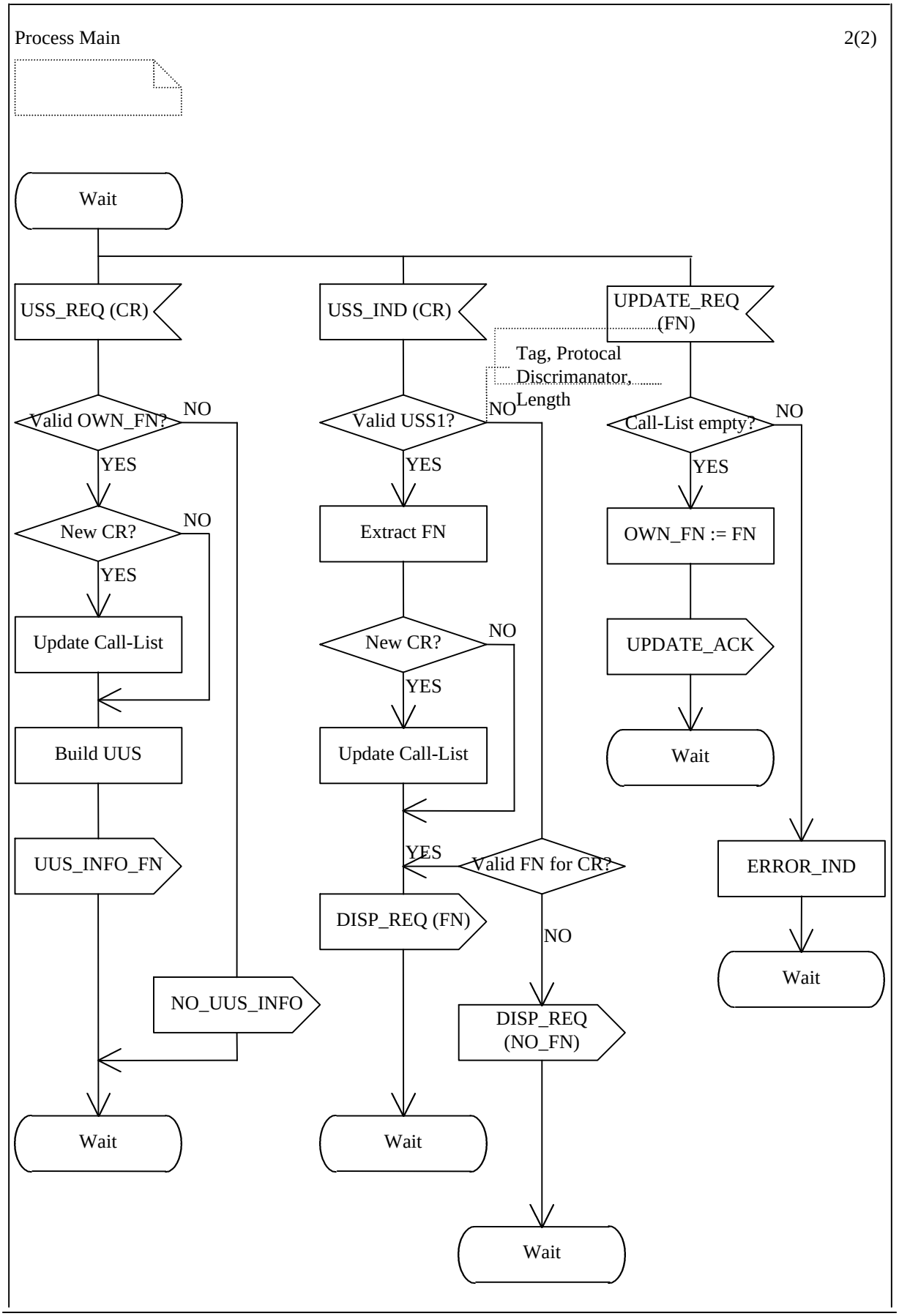
Process Main
2(2)
Wait
USS_REQ (CR)
USS_IND (CR)
UPDATE_REQ (FN)
Tag, Protocal Discrimanator, Length
Valid OWN_FN?
NO
YES
New CR?
NO
YES
Update Call-List
Build UUS
UUS_INFO_FN
NO_UUS_INFO
Wait
Valid USS1?
NO
YES
Extract FN
New CR?
NO
YES
Update Call-List
YES
Valid FN for CR?
DISP_REQ (FN)
NO
DISP_REQ (NO_FN)
Wait
Wait
Call-List empty?
NO
YES
OWN_FN := FN
UPDATE_ACK
Wait
ERROR_IND
Wait