AUTHOR MORANE	DATE 11 August 2000	REF. E 10 T 6001 3	
Name of Activity/WP WP 22: Review of Form Fit Functional Specification			Contract: WP/ACT:
Company/organization MORANE		Team	MORANE WP/ACTIV: 22

FFFS FOR
FUNCTIONAL ADDRESSING

ACCESS : ☑ Public ❑ Restricted ❑ Confidential

	NAME	**DATE**	**VISA**
Author	MORANE	17 May 2000	WP 22 members
Reviewed	MORANE PMT	11 August 2000	PMT
Approval	R. Sarfati	11 August 2000	

EVOLUTION SHEET

VERSION	DATE	AUTHOR	MODIFICATION
A	8 July 1996	Italtel	Creation
B	30 Aug 1996	Italtel	First Revision
C	18 Sept 1996	Italtel	Second Revision
1	25 Sept 1996	Italtel	First approved version
1A	30. June 1997	Siemens	Update Delete multiple Registration Change "procedure subaddressing"
2	25. July 1997	Siemens	Error cases Editorial changes
3	11 August 2000	WP 22 members	Specification update third issue

TABLE OF CONTENTS

1. **INTRODUCTION** **5**

2. REFERENCE DOCUMENTS **6**

3. TERMINOLOGY AND ABBREVIATIONS **7**

4. REQUIREMENTS OF FUNCTIONAL ADDRESSING **10**

4.1 FOLLOW ME (FM) 10

5. REALIZATION OF FOLLOW ME **11**

5.1 HANDLING OF MOBILE INITIATED USSD 11
5.1.1 General 11
5.1.2 Handling of USSD request at MS 11
5.1.3 Processing CM-Service-Request at Network 12
5.1.4 Processing the USSD request at Network 12
5.2 FOLLOW ME REGISTRATION 15
5.2.1 General 15
5.2.2 Procedure in MS 15
5.2.3 Procedure in MSC 16
5.2.4 Procedure in VLR 16
5.2.5 The FMm Procedure within the HLR 17
5.2.6 The FMf Procedure within the FFN 17
5.3 FOLLOW ME DEREGISTRATION 18
5.3.1 General 18
5.3.2 Procedure in MS 19
5.3.3 Procedure in MSC 19
5.3.4 Procedure in VLR 19
5.3.5 The FMm Procedure within the HLR 19
5.3.6 The FMf Procedure within the FFN 20
5.4 FOLLOW ME INTERROGATION 20
5.4.1 General 20
5.4.2 Procedure in MS 21
5.4.3 Procedure in MSC 22
5.4.4 Procedure in VLR 22
5.4.5 The FMm Procedure within the HLR 22
5.4.6 The FMf Procedure within the FFN 23
5.5 FOLLOW ME TERMINAL NOTIFICATION 23
5.5.1 General 23
5.5.2 Procedure in the FFN 25
5.5.3 Procedure in the MS 25
5.6 INFORMATION STORED IN THE HLR 25
5.6.1 Subscription checking 25
5.6.2 Function checking 25
5.7 INFORMATION STORED IN THE MS 28

6. USAGE **28**

6.1 GENERAL 28
6.2 PROCEDURE IN CALLING USER 30
6.3 PROCEDURE IN GMSC1 30
6.4 PROCEDURE IN FFN 30
6.5 PROCEDURE IN GMSC2 30
6.6 PROCEDURE IN HLR 30
6.7 PROCEDURE IN VLR 30
6.8 PROCEDURES IN VMSC 30
6.9 PROCEDURES IN BSS 31

6.10 PROCEDURES IN MS 31

7. ERROR CODES 32

7.1 CALL ESTABLISHMENT 32
7.2 USSD 32
7.2.1 GSM defined Error Codes 32
7.2.2 Follow Me specific Error Codes 32

1. INTRODUCTION

Functional Addressing is the GSM-R feature that allows calling users by their Functional Number, where Functional Numbers identify both functions and applications. From a logical point of view EIRENE system can be seen as a set of applications/functions running over a number of physical terminations. Every application/function makes use of a basic telecommunication service (bearer service or teleservice). One physical termination can be either a mobile terminal or a support of a mobile terminal. A Functional Number identifies the user's function rather than the number of its terminal; for instance a certain functional number identifies the driver of a certain train and not the number of the phone of the cab radio installed in the locomotive.

This feature guarantees the independence of the number known to the user from the physical terminal used to answer.

EIRENE network users can originate and receive calls by functional numbers. Being Functional Numbers structured as EIRENE MSISDN numbers, these can be dialled also from other external networks (e.g., a connected public PSTN/ISDN network).

The scope of this document is to present the solution for Functional Addressing using Follow Me (FM).

The Follow Me is based on Unstructured Supplementary Service Data (USSD) and call forwarding functionality.

2. REFERENCE DOCUMENTS

[1] GSM 01.04 7.0.0 Digital cellular telecommunications system (Phase 2+);Abbreviations and acronyms. 3GPP TR 21.905 v3.0.0 3G Vocabulary *(Draft Version*.

[2] 3GPP TS 22.001 3.2.1 Principles of Telecommunication Services Supported by a GSM Public Land Mobile Network(PLMN).

[3] 3GPP TS 22.004 3.2.0 General on Supplementary Services .

[4] 3GPP TS 22.030 3.3.0 Man-Machine Interface (MMI) of the Mobile Station (MS).

[5]

[6] 3GPP TS 22.090 3.1.0 Unstructured supplementary services operation – Stage 1.

[7] 3GPP TS 23.002 3.3.0 Network architecture.

[8] 3GPP TS 23.011 3.0.0 Technical Realization of Supplementary Services – General Aspects.

[9] 3GPP TS 23.015 3.1.0 Technical realisation of Operator Determined Barring (ODB).

[10]

[11] 3GPP TS 23.090 3.1.0 Unstructured Supplementary Service Data (USSD) – Stage 2.

[12] 3GPP TS 24.002 v3.0.0 Digital cellular telecommunications system (Phase 2+);GSM Public Land Mobile Network (PLMN)access reference configuration.

[13] 3GPP TS 24.007 3.3.0 Mobile Radio Interface Signalling Layer 3 - General Aspects.

[14] 3GPP TS 24.008 3.3.0 Mobile radio interface layer 3 specification, Core Network Protocols - Stage 3.

[15] 3GPP TS 24.010 3.0.0 Mobile Radio Interface Layer 3 - Supplementary Services Specification - General Aspects.

[16] 3GPP TS 24.080 3.2.0 Mobile radio Layer 3 Supplementary Service specification – Formats and coding.

[17] spare number

[18] 3GPP TS 24.090 3.0.0 Unstructured Supplementary Service Data (USSD) – Stage 3.

[19] 3GPP TS 29.002 3.4.0 Mobile Application Part (MAP)

[20]

[21] MORANE Sub-System Requirements Specification, Jan 2000, A 04/02 T 6002

[22] 3G TS 22.094: 3rd Generation Partnership Project; Technical Specification Group services and System aspects; Follow Me services description; Stage 1.

[23] 3G TS 23.094: 3rd Generation Partnership Project; Technical Specification Group core Network; Follow Me (FM) - Stage 2.

[24] 3G TS 27.001 v3.4.0 General on terminal adaption function (TAF) for mobile station (MS)

[25] 3G TS 29.007 v3.4.0 General requirements and interworking between the PLMN and the ISDN

3. TERMINOLOGY AND ABBREVIATIONS

BC	Bearer Capability
BSS	Base Station System
DSD	Driver Safety Device
E.164	CCITT Recommendation (Numbering plan for the ISDN era)
EIRENE	European Integrated Railway Radio Enhanced Network
ETCS	European Train Control System
GSM	Global System for Mobile Communications
GSM-R	GSM Railway
GMSC	Gateway MSC
FFN	Follow Me Function Node
HLR	Home Location Register
IAM	Initial Address Message
ID	Identity
IMSI	International Mobile Subscriber Identity
ISDN	Integrated Services Digital Network
ISUP	ISDN User Part
MAP	Mobile Application Part
MS	Mobile Station
MSC	Mobile Switching Centre
MSISDN	Mobile Station ISDN Number
MSRN	Mobile Station Roaming Number
ODD	Originally Dialled Digits
RAC	Railway Access Code
RN	Railway Network
RSN	Railway Subscriber Number
SA	SubAddress
SS	Supplementary Service
SSRS	Sub System Requirement Specification
UIC	Union Internationale des Chemins de Fer
USSD	Unstructured Supplementary Service Data
VLR	Visitor Location Register
VMSC	Visited MSC

Abbreviations used in the specification are listed in GSM 01.04.

According to [21], the following terminology is used:

- **telephone_number** (TN): a number that can be employed by users of a telecommunication network to route calls to a specific user/function.
- **MSISDN_number**: the telephone_number used in GSM Network. The MSISDN_numbers are stored in HLR. There could be several HLR in EIRENE network and each MSISDN is stored in one of them.
- **functional_address** (FA): is an alphanumeric address that identifies an end user/function.
- **functional_number** (FN): the full number used within the functional numbering scheme to identify an end user or system by function or role rather than by a specific item of radio equipment or user subscription. The functional_number is also said "dummy" or "virtual" number and shall **not** contain alphabetical characters. Functional_numbers are stored in one or more FFN and they identify "dummy" users having their own "dummy" profiles. There is no restriction in having within the same physical HLR both MSISDN and functional_numbers, that is HLR and FFN colocated.

  The association functional_numbers and MSISDN_numbers is done through the Registration Operation and is removed through the Deregistration Operation. These operations are normally under subscriber and operator control and are to be repeated whenever the association is to be modified.

  At usage time a translation is to be performed call by call from functional to mobile "true" number.

  If functional_address does not contain alphabetical characters, functional_address is equal to functional_number. Otherwise it shall be translated in a functional_number before using it as telephone_number.
- **functional_number_type** (FNT): a 1 digit number indicating the type of the functional_number.
- **running_number** (RN): a 1 to 8 digit identity given to a train by operational staff for a particular journey.
- **on_train_function_code** (TFC): a 2 digit number that identifies unequivocally a function or a user on train.
- **train_functional_number** (TFN): a 8 to 11 digit functional_number identifying unequivocally a user/function on a given train. It is made by:

  functional_number_type + running_number + on_train_function_code.
- **stock_number** (SN): an identity assigned to an item of rolling or traction stock on a permanent basis. According to Leaflet UIC 438-1, is up to 12 digits long.
- **engine_number** (EN): according to Leaflet UIC 438-3, the "number of the powered unit allocated by each railway." It is made up of 6 out of 12 digits of the Stock Number.
- **on_engine_function_code** (EFC): a 2 digit number that identifies unequivocally a function or a user on engine.
- **engine_functional_number** (EFN): a Functional Number identifying unequivocally a user/function on an engine. It is made by:

  functional_number_type + engine_number + on_engine_function_code.
- **maintenance_services_functional_number** (MSFN): is a Functional Number identifying unequivocally a maintenance services personnel. It is made up of the following:

  Functional Number Type + working Location + Team type + Member identity + Team number.
- **coach_number** (CN): according to Leaflet UIC 438-1, the "actual vehicle number" composed by 2 digits identifying the operating characteristics + 2 digits identifying certain technical characteristics

+ 3 digits identifying the serial number. The functional_number_type + the coach_number is an example of MSISDN functionally structured number.

- **on_coach_function_code (CFC):** a 2 digit number that identifies unequivocally a function or a user on a coach.
- **coach_functional_number (CFN):** a Functional Number identifying unequivocally a user/function on a coach. It is made up of the following:

  functional_number_type + coach_number + on_coach_function_code

For convenience, in the rest of this document two new definitions - ***root*** and ***branch*** - will be used with different meanings according to the functional_number_type:

functional_number_type	***root***	***branch(s)***
train_functional_number	running_number	on_train_function_code(s)
maintenance_service_functional_number	working_location + team type + member identity	team number
engine_functional_number	engine_number	on_engine_function_code
coach_functional_number	coach_number	on_coach_function_code

Table 3.1

- **functional_number_group** (FNG): A list of functional numbers where every item has the same root.
- **addressing_reference_functional_number** (ARFN): An item used as addressing parameter in HLR-HLR MAP messages.
- **Follow Me Function Node:** network node in the PLMN of the remote party. It is the node where the FM data of the remote party is handled. This can be implemented in the HLR or any other operator specific network nodes (such as a SCP)
- **Home Location Register**: node in which "mobile " numbers of the mobile terminals ("true" MSISDN numbers) are stored. The HLR node may also be used as the platform on which the Follow Me Function Node may be implemented.
- **FM service supervisor**: the mobile subscribers who are allowed to modify the Follow Me data of the remote party who has been registered to another initiating subscriber for the Follow Me application. The FM service supervisors shall be authorised by the network operator.
- **FMm**: the function that checks Follow Me subscription Class of Registration during the Follow Me procedures on the HLR.
- **FMf**: the function that forwards the functional number to an MSISDN on the FFN.

4. REQUIREMENTS OF FUNCTIONAL ADDRESSING

Logically Functional Addressing is split into two stages:

- the procedures (operations) to initialize and interrogate the data structures to allow Functional Addressing (FollowMe procedures).

- the usage of these data structures by call processing for Functional Addressing handling

According to SSRS [21] it is assumed that Single Numbering scheme is used for Functional Addressing in the GSM-R Network.

4.1. Follow Me (FM)

FM is a Supplementary Service that allows to relate the function to the MSISDN_number identifying the mobile where the function is active.

The following user procedures are possible in order to handle Follow Me:

- Follow Me registration -- for setting up a relationship between a functional number and a MSISDN number
- Follow Me deregistration -- for deleting a relationship previously set up
- Follow Me interrogate -- for interrogating dummy user profile

The Follow me de-registration is possible from the subscriber who has originated the Follow me registration and by other users which are entitled to perform a forced deregistration.

In the second case a notification shall be sent to the user (MSISDN) registered against this functional number in order

- to notify the changed status and
- to trigger related actions on the mobile side (interrogation).

All the Follow Me procedures use the USSD Phase 2 Supplementary Service to carry the information on the network. All USSD request messages have a USSD response message that may contain (requested) data. In the following figures these response messages are not shown. For further information see section 5.1.

The FM service is provided by co-operation of two functions, named FMm and FMf. These functions are located on two different logical (and, possibly, also physical) equipment: FMm is located on HLR and FMf on FFN.

Subscription is provided for the FM-Service.

Follow Me procedure Subscription data are stored in Mobile user data (in HLR) and are stored in dummy user data (FFN).

The Follow Me supplementary service is used under user and operator control to manage these types of functional_numbers:

- Train_functional_number
- Maintenance_services_functional_number
- Coach_number

For engine_functional_number only registration and deregistration at provisioning by operator are allowed and are not under user control.

5. REALIZATION OF FOLLOW ME

5.1. Handling of mobile initiated USSD

5.1.1. General

Follow Me is a PLMN specific supplementary service and is based on USSD Phase 2. All the messages between MS and NSS and internal to NSS are USSD messages. FM is an USSD application that acts as call forwarding and USSD is used to carry the information needed by the FM application through the network. The phase of the GSM protocol used is "2".

The Unstructured Supplementary Service Data (USSD) mechanism allows the MS user and a PLMN operator defined application to communicate in a way that is transparent to the MS and to intermediate network entities. The mechanism allows development of PLMN specific supplementary services. The following diagram shows how handling of USSD is carried out in the case of Follow Me. The functionality of Follow Me is split on HLR (FMm) and on FFN (FMf).

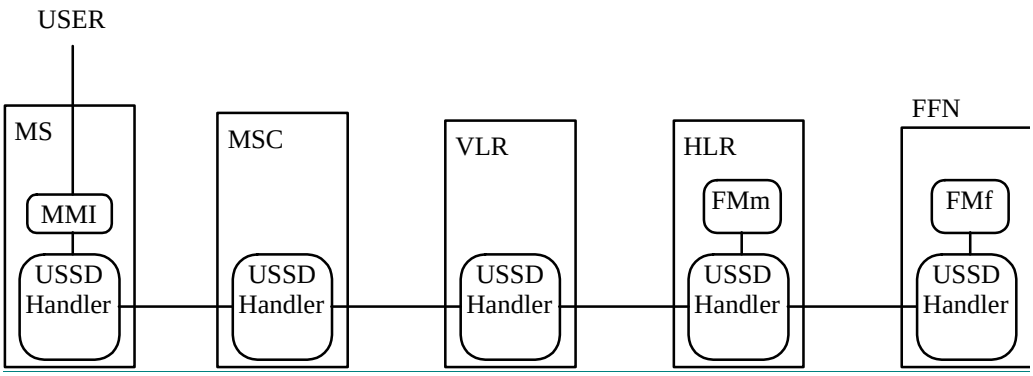

Fig. 1 USSD handling for FM

The ETSI specifications define the requirements for handling USSD at the MS and network entities. The MMI for USSD is specified in [4].

As described in [3], a mobile station can at any time initiate a USSD request to the network. No prior provision of the service is required, although provisioning of services that make use of USSD may be required. All USSD messages (requests and responses), contain the USSD string, an alphabet indicator and language indicator, as defined in [3].

5.1.2. Handling of USSD request at MS

When the user makes a request that the MS determines is to make use of USSD, the MS shall set up a transaction using [14] interworking (CM-Service-Request) to the network and send the USSD request to the MSC and await a response. This USSD request is invoked by sending a REGISTER message to the network containing a ProcessUnstructuredSS-Request invoke component.

When the MS receives the response, it shall display the information contained to the user. In case of Follow Me the request contains a code indicating that the message has to be routed to the HLR.

The mobile station shall not initiate USSD operations in parallel to any call independent supplementary service transaction. Only one transaction for USSD operations per user is allowed at a time. However, the mobile station is allowed to initiate USSD operations in parallel to call related transactions.

The mobile station may clear the transaction at any time by sending a RELEASE COMPLETE message upon request of the user.

5.1.3. Processing CM-Service-Request at Network

Standard handling according [14] and [19] applies. If no security functions are required (e.g Ciphering) the network sends the CM-Service-Accept message, which triggers sending the USSD-Request message at MS side.

In case of errors CM-Service-Reject or Abort are sent according [14].

5.1.4. Processing the USSD request at Network

The receiving network entity shall pass the data received in the request to the application handling USSD operations and shall wait for the response of the application. The location, nature and contents of USSD applications are, by definition, service provider and network operator dependent, but may include:

- Setting up or releasing signalling channels;
- Passing the request to another network entity (unchanged or changed);
- Passing a different USSD request to another network entity (this is the Follow Me case);

and/or

- Requesting further information from the MS (one or more times).

The application may terminate the dialogue upon completion of handling the request

When the application terminates the dialogue, the network shall clear the transaction by sending a RELEASE COMPLETE message containing either:

- a return result component in case of successful result or in case of Follow Me specific errors which are not defined in [19]
- a return error in case of unsuccessful result due to protocol error.

If the network is unable to process the request received from the mobile station, it shall clear the transaction by sending a RELEASE COMPLETE message containing an error indication.

5.1.4.1. Handling of USSD request at MSC

Standard handling (see [6]). The messages are passed unchanged.

5.1.4.2. Handling of USSD request at VLR

Standard handling (see [6]). The messages are passed unchanged.

5.1.4.3. Handling of USSD request at HLR

An HLR shall always process a USSD request locally.

If the HLR does not support the alphabet used in a USSD request, it shall inform the MS and release the transaction.

According to these assumptions, the following figures show the flow of USSD messages for Follow Me service.

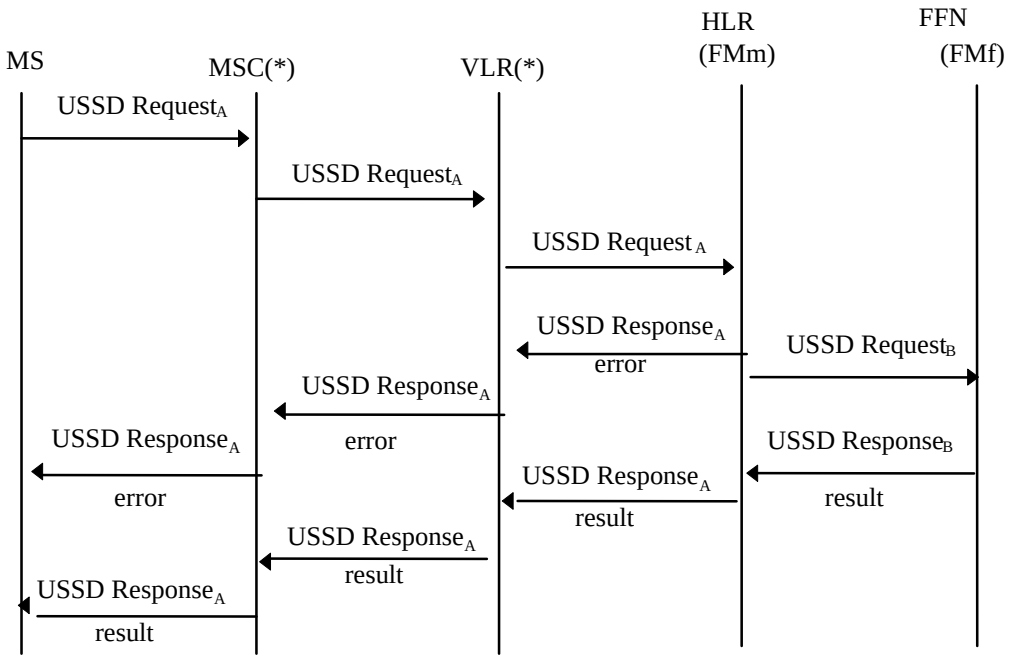

Fig. 2: Information flow for mobile initiated USSD Request containing FM related operations

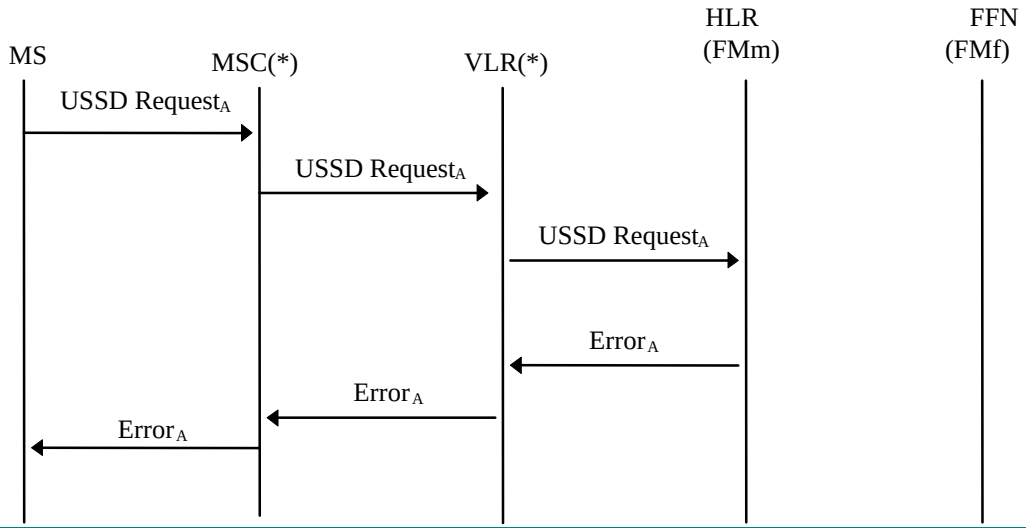

Fig. 3: Information flow for mobile initiated failed USSD Request on HLR

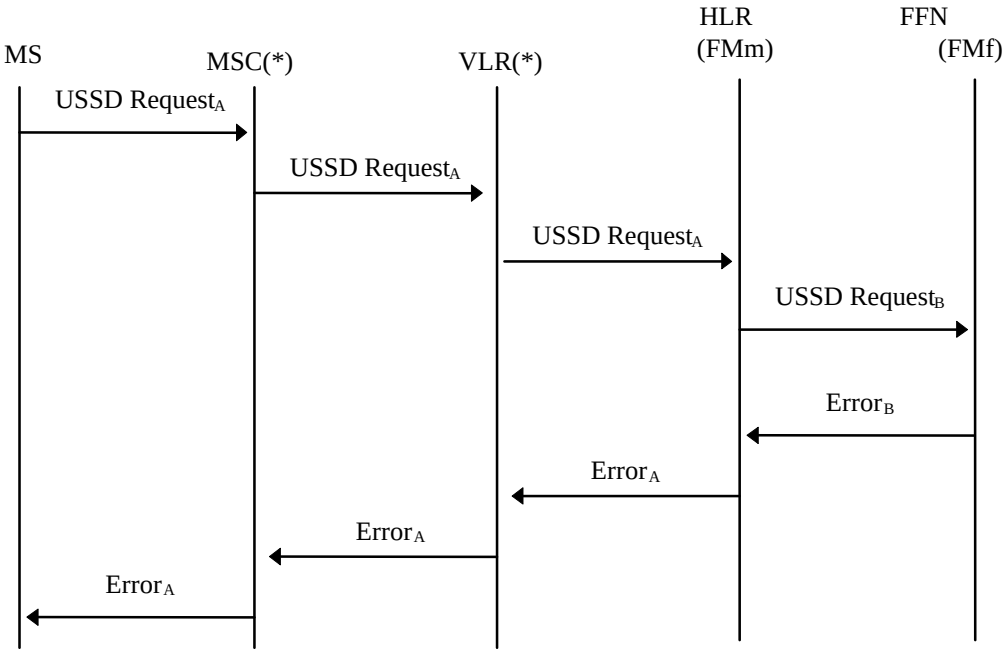

Fig. 4: Information flow for mobile initiated failed USSD Request on FFN.

(*) MSC and VLR are passing the message in a transparent way.

NOTE: USSD Request$_A$ and USSD Request$_B$ contain the same Alphabet Indicator (SMS default) and the same language indicator (default) and the same USSD Strings. USSD requests on MAP interfaces (MSC-HLR and HLR-FFN) use MAP phase II defined in [19].

Figure 5 shows the interface between MS and Network.

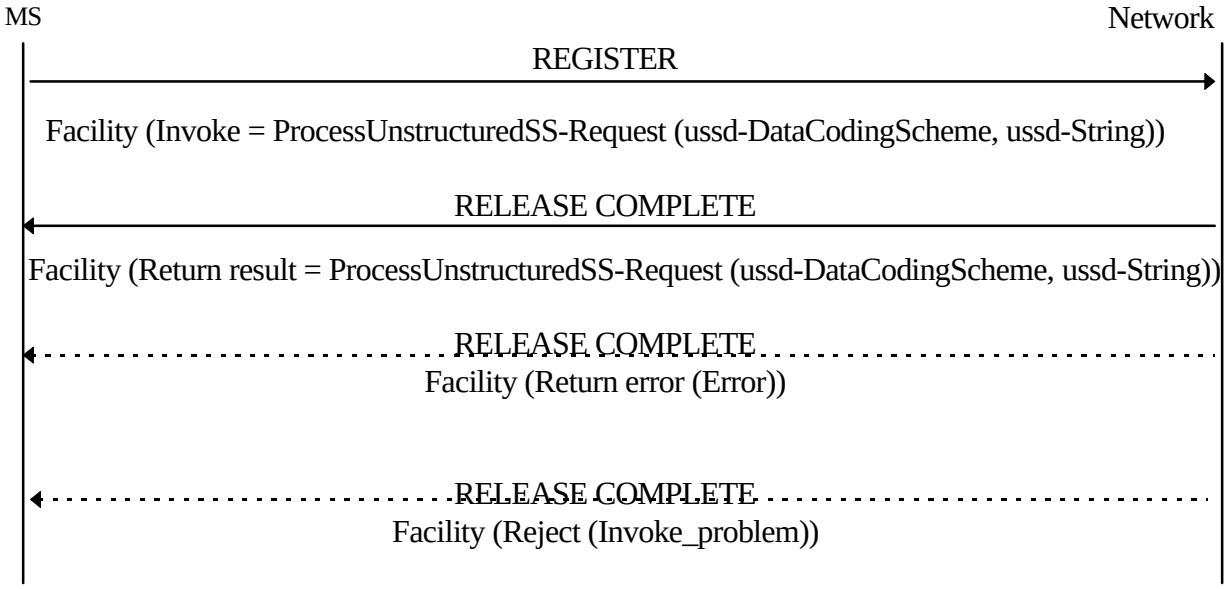

Fig. 5: Mobile initiated USSD operation, network does not request further information

NOTE: The mobile station may clear the transaction at any time by sending a RELEASE COMPLETE upon request of the user.

5.2. Follow Me Registration

5.2.1. General

Follow Me Registration procedure sets up a temporarily relation between a functional_number and a MSISDN_number

The user shall registrate every function supported by his terminal, therefore on_train_function_codes (for train_functional_number)or team_number (for maintenance_services_functional_number), etc…shall be included in the Follow Me Registration procedure.

The user cannot register functions supported by other mobile terminals. User shall guarantee that all the functions registered are supported by its own terminal.

The result of registration procedure shall be sent back to the mobile. In case of failure a cause shall be provided.

Up to 3 [+1] different functional_number_groups may be registered by the same MS at a time. All the functional_numbers are stored on the SIM. No checking on functional_numbers is performed. There is only one Functional Number per command (per USSD Request).

For train_functional_number, the result of the registration of all the users might define a set of links between one HLR and a set of FFN spread in different countries.

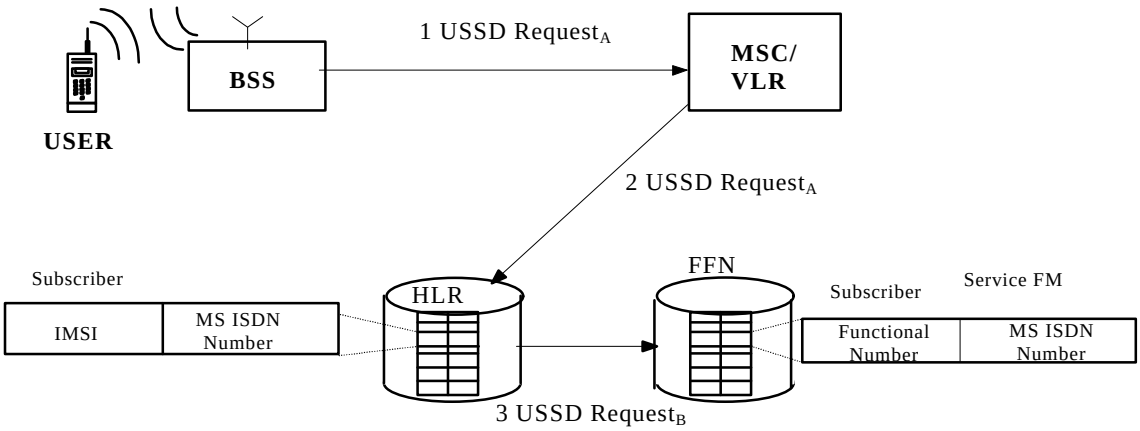

Fig. 6 FM registration

5.2.2. Procedure in MS

The following data are to be provided per terminal when registration is invoked:

- Procedure Type Identifier (Registration)
- The service code (SC) for the Follow Me service
- The Functional Number (FN)

The Functional Number (FN) shall be in the following format.

FN = RAC + RSN = RAC + FUNCTIONAL NUMBER TYPE + *ROOT* + *BRANCH*

Reference the FA FIS for specific string structures.

Successful Outcome

The above data are stored on the SIM.

5.2.3. Procedure in MSC

Standard USSD handling (see [6])

5.2.4. Procedure in VLR

Standard USSD handling (see [6])

5.2.5. The FMm Procedure within the HLR

When Registration procedure is invoked, HLR has to request FFN to activate call forwarding for the functional number received.

The actions performed by the function FMm (resident in the HLR which receives the data from the MS) listed below are to be performed:

1. It carries out subscription and function checking (as per 5.6.1 RENVand 5.6.2RENV) in order to verify that the mobile is enabled to request the procedure. It also checks the branch contained in the message.
2. It is responsible for retrieving the MSISDN corresponding to the Bearer Service (BS) indicated by the functional number in the Registration request from the IMSI.
3. It then builds USSD request message which is sent by the HLR to the FFN. The message activates FMf (resident on the FFN which is unequivocally identified by RAC). This message will contain all the data necessary to activate a call forwarding (i.e. the functional_number and the MSISDN retrieved).

(Note: In case of one FFN for a single Railway/Country, RAC analysis should be sufficient to identify the FFN)

4. It then awaits a response message from FMf (sent by FFN to HLR)

USSD response message

FMm (HLR) relays to the MS the USSD response message coming from the FMf (FFN).

The USSD response message shall contain a USSD string as defined in [23]. The USSD string will contain either a successful outcome code or an outcome code describing an unsuccessful result due to a Follow Me error as defined in [23].

5.2.6. The FMf Procedure within the FFN

The function FMf (Resident in the FFN) retrieves the functional_number (the RAC, the functional_number_type, the *root* and the *branch*) and then uses it as a subscriber number. FMf ensures that no another call forwarding is currently active on that number. After the functional_number has been checked, the FMf then activates a call forwarding on all the services associated with the functional_number.

USSD response message

The FMf (FFN) will then return to the FMm (HLR) the notification of acceptance of the request or rejection of the request in case of Follow Me error only.

This notification will optionally contain the forwarded-to number.

The notification is made through the USSD response message containing the USSD string composed of either a successful outcome code or an outcome code describing an unsuccessful result due to a Follow Me error as defined in [23]

5.3. Follow Me Deregistration

5.3.1. General

The Follow Me Deregistration procedure removes the association between a functional_number and a MSISDN_number, i.e., it de-activates the call forwarding on the functional_number. The result of Deregistration procedure is the deactivation and erasure of Follow Me Service on the functional_number where the "forwarded_to number" is the MSISDN_number identifying the mobile where the function is no more active.

A previous registration can be erased in either of the following two ways:

- the subscriber or FM service supervisor can specifically erase a previous registration with an appropriate control procedure;

- all information is erased as a result of withdrawal of the supplementary service (administrative handling).

Deregistration removes an association between functional_number and MSISDN_number.

An association may be removed only if deregistration is requested by the same mobile that had previously set it up or a FM service Supervisor.

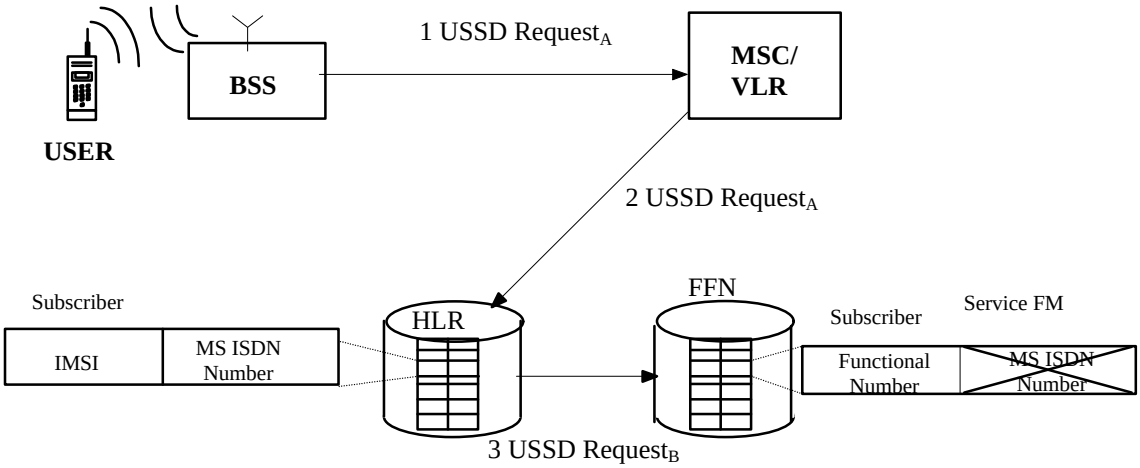

Fig. 7 FM deregistration

5.3.2. Procedure in MS

The following data are to be provided when deregistration is invoked:

- Procedure Type Identifier (Deregistration)
- The service code (SC) for the Follow Me service
- The Functional Number (FN)
- The supervisor indicator (for forced deregistration) and the MSISDN to deregister

The Functional Number (FN) shall be in the following format.

FN = RAC + RSN = RAC + FUNCTIONAL NUMBER TYPE + *ROOT* + *BRANCH*

Reference the FA FIS for specific string structures.

Successful Outcome

The data stored on SIM are to be accordingly updated.

5.3.3. Procedure in MSC

Standard USSD handling (see [6])

5.3.4. Procedure in VLR

Standard USSD handling (see [6])

5.3.5. The FMm Procedure within the HLR

When Deregistration procedure is invoked, HLR has to request FFN to de-activate call forwarding for the functional_number received.

The actions performed by the function FMm (resident in the HLR which receives the data from the MS) listed below are to be performed:

1. It carries out subscription and function checking (as per 5.6.1 and 5.6.2) in order to verify that the mobile is enabled to request the procedure. It also checks the branch contained in the message.
2. It is responsible for retrieving the MSISDN corresponding to the Bearer Service (BS) indicated by the functional number in the Deregistration request from the IMSI.
3. It then builds USSD request message which is sent by the HLR to the FFN. The message activates FMf (resident on FFN which is unequivocally identified by RAC and eventually the leading digits of the *root*). This message will contain all the data necessary to erase the call forwarding (i.e. the functional_number and the MSISDN retrieved).

   (Note: In case of one FFN for a single Railway/Country, RAC analysis should be sufficient to identify the FFN).
4. It then awaits a response message from FMf (sent by FFN to HLR).

USSD response message

FMm (HLR) relays to the MS the USSD response message coming from the FMf (FFN).

The USSD response message shall contain a USSD string as defined in FIS for Functional addressing. The USSD string will contain either a successful outcome code or an outcome code describing an unsuccessful result due to a Follow Me error as defined in [23].

5.3.6. The FMf Procedure within the FFN

The function FMf (resident on FFN) retrieves the functional_number (the RAC, the functional_number_type, the *root* and the *branch*) and then uses it as a subscriber number. FMf shall verify that the MSISDN received by HLR is the forwarded_to number of the call forwarding activated on the functional_number. The FMf then deactivates the call forwarding for the functional_number.

USSD response message

The FMf (FFN) will then return to the FMm (HLR) the notification of acceptance of the request or rejection of the request in case of Follow Me error only.

This notification will optionally contain the forwarded-to number.

The notification is made through the USSD response message containing the USSD string composed of either a successful outcome code or an outcome code describing an unsuccessful result due to a Follow Me error as defined in [23].

Remark: the safe storage of call forwarding related data has to be ensured by FMf before notifying acceptance of the request.

5.4. Follow Me Interrogation

5.4.1. General

The data request procedure enables the mobile subscriber to obtain information about the data stored in the PLMN. Interrogation of FM is handled by the HLR, which returns the required information or error to the MS.

Follow Me Interrogation procedure is used to obtain information on the Follow Me service linked to the functional_number.

User can ask for Follow Me related information stored in the FFN dummy profile (see paragraph “Information stored in the FFN”).

The response of Interrogation procedure contains the MSISDN_number "forwarded_to number" if the Follow Me service is active.

The mobile terminal should always check that the result of the Follow Me Interrogation is consistent with the list of FN’s stored on the SIM. If necessary the terminal shall update it’s functional number list to synchronize with the network.

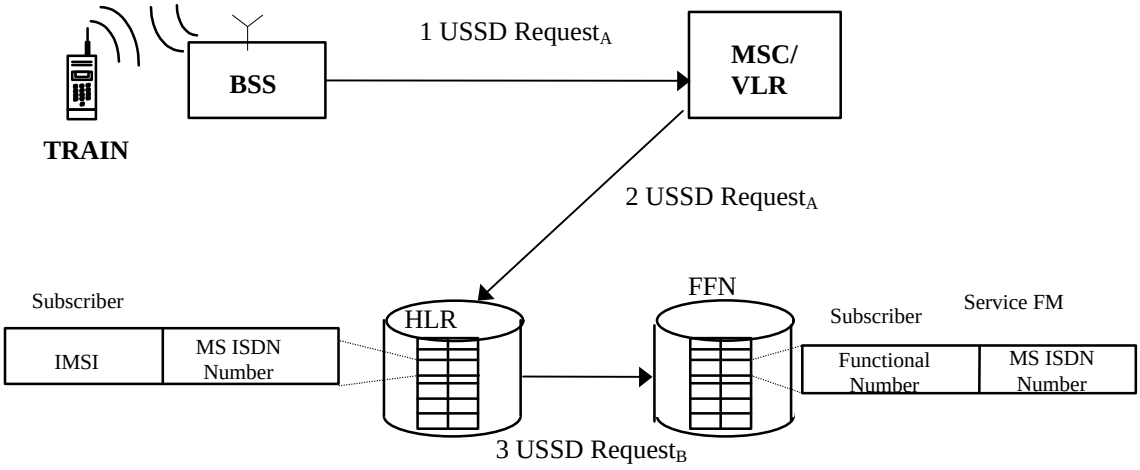

Fig. 8 FM interrogation

5.4.2. Procedure in MS

The following data are to be provided when interrogation is invoked:

- Procedure Type Identifier (Interrogation)
- The service code (SC) for the Follow Me service
- The Functional Number (FN)

The Functional Number (FN) shall be in the following format.

FN = RAC + RSN = RAC + FUNCTIONAL NUMBER TYPE + *ROOT* + *BRANCH*

Reference the FA FIS for specific string structures.

Upon receiving the result of a FN interrogation request from the network, the terminal shall ensure that list of registered FN's stored on the SIM for the terminal is consistent with the result of the networks response.

The following are the main cases:

1. The network FN interrogation result contains the **same** MSISDN as the terminals MSISDN:
   - the terminal checks the list of registered FN's on its SIM, two sub cases exist:
     a. the FN already exists in the list of registered FN's, therefore the network and terminal FN lists are already in synchronization and no terminal action is required.
     b. The FN does not exist in the list of registered FN's for this terminal, therefore the network and terminal lists are out of synchronisation and the terminal shall **add** the interrogated FN to its list of registered FN's.
2. The network FN interrogation result contains a **different** MSISDN then the terminals MSISDN:
   - The terminal checks the list of registered FN's on its SIM, two sub-cases exist
     a. the FN exists in the list of registered FN's for this terminal, therefore the network & terminal FN lists are out of synchronisation, the terminal shall **remove** the interrogated FN from its list of registered FN's as it is no longer valid for this terminal/SIM.
     b. The FN does not exist in the list of registered FN's for this terminal, therefore no terminal action is required.
3. The network FN interrogation results in an outcome code which does not contain a registered MSISDN, two main sub-cases apply:
   - The interrogated FN is in the list of FN's registered against the terminal on the SIM:
     a. For the certain outcome codes listed the terminal shall remove the FN from its list of registered FN's on the SIM:
        - Initiating Subscriber Authorization failed (OC - 22)
        - Unknown remote party (OC - 41)
        - FM not subscribed (OC - 42)
        - FM not registered to remote party (FN) (OC – 62)
     b. For all other outcome codes no terminal action is required.
   - The interrogated FN is not in the list of FN's registered against the terminal on the SIM:
     a. No terminal action is required.

5.4.3. Procedure in MSC

Standard USSD handling (see [6])

5.4.4. Procedure in VLR

Standard USSD handling (see [6])

5.4.5. The FMm Procedure within the HLR

When Interrogation procedure is invoked, HLR has to request FFN to interrogate the call forwarding for the functional_number received.

The actions performed by the function FMm (resident in the HLR which receives the data from the MS) listed below are to be performed:

1. It is responsible for retrieving the MSISDN corresponding to the function in the Interrogation request. It checks the branch contained in the message.
2. It then builds the USSD request message which is sent by the HLR to the FFN. The message activates FMf (resident on FFN which is unequivocally identified by RAC and eventually the leading digits of the *root*). This message will contain all the data necessary to interrogate the functional_number to retrieve the MSISDN_number corresponding to the forwarded_to_number of the interrogated functional_number.

   (Note: In case of one FFN for a single Railway/Country, RAC analysis should be sufficient to identify the FFN).
3. It then awaits a response message from FMf (sent by FFN to HLR).

USSD response message

FMm (HLR) relays to the MS the USSD response message coming from the FMf (FFN).

The USSD response message shall contain a USSD string as defined in FIS for Functional addressing. The USSD string will contain either a successful outcome code or an outcome code describing an unsuccessful result due to a Follow Me error as defined in [23].

5.4.6. The FMf Procedure within the FFN

The function FMf (resident on FFN) retrieves the functional_number (the RAC, the functional_number_type, the *root* and the *branch*) and then uses it as subscriber number. For the functional_number, FMf shall retrieve the forwarded_to number of the call forward activated on the functional_number.

USSD response message

The FMf (FFN) will then return to the FMm (HLR) the notification of acceptance of the request or rejection of the request in case of Follow Me error only.

This notification will contain the forwarded-to number if the request is successful.

The notification is made through the USSD response message containing the USSD string composed of either a successful outcome code or an outcome code describing an unsuccessful result due to a Follow Me error as defined in [23].

5.5. Follow Me Terminal Notification

5.5.1. General

In certain cases such as Forced Deregistration it is possible for another authorized subscriber to change a users Follow Me registration in the FFN. It can also be foreseen that this could be done through operator provisioning interfaces to the Follow Me Functional Node. In these cases the list of FN's stored on a users terminal may become out of synchronisation with the list of FN stored in the FFN.

In order to rectify this situation, and ensure proper synchronisation between the network and terminal follow me data, a procedure for the Notification of the Follow Me Terminal is defined..

The notification is performed by a network initiated USSD message originated from the FFN. Upon receipt of the notification the MS shall to perform a FN interrogation on the notified FN.

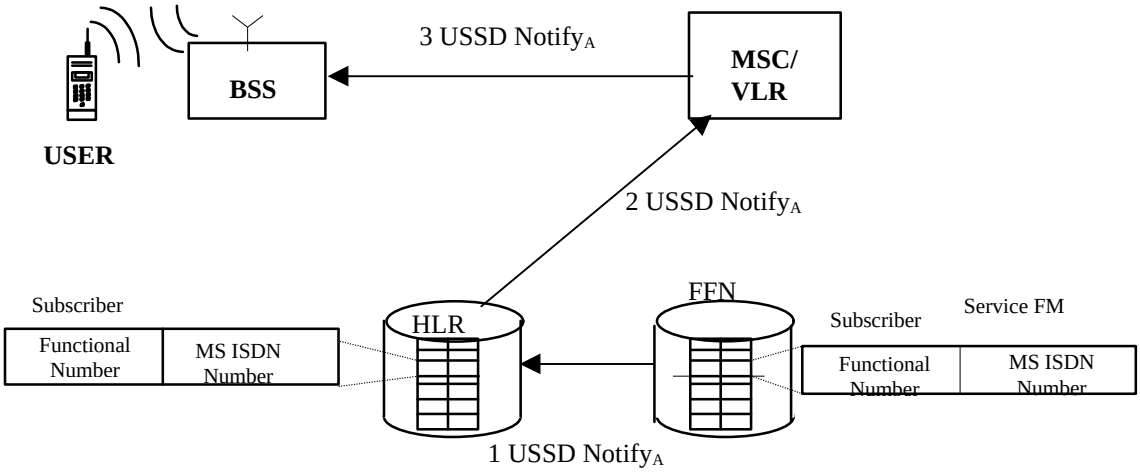
3 USSD Notify$_A$
BSS
MSC/
VLR
USER
2 USSD Notify$_A$
Subscriber
Functional
Number
MS ISDN
Number
HLR
FFN
Subscriber
Service FM
Functional
Number
MS ISDN
Number
1 USSD Notify$_A$

5.5.2. Procedure in the FFN

When the FFN receives a forced deregistration message according to 3G 23.094 [ref. Follow me specifications] it should retrieve the functional number and the MSISDN from the USSD message.

1. It then builds a USSD Notify message containing the reregistered FN to be sent after the deregistration procedure has been finalised.

2. It then sends the USSD Notify message to the HLR of the MSISDN subscriber.

3. It awaits the response of the HLR

5.5.3. Procedure in the MS

The mobile should pass the information received in the USSD notification to an application which is responsible for the following actions:

1. Send a USSD response message to the network by sending a FACILITY message with empty response.

2. It retrieves the FN from the USSD notify message and initiates an interrogation on this functional number.

5.6. Information stored in the HLR

5.6.1. Subscription checking

The FMm function on HLR shall check the subscription of MS to allow the Follow Me operations.

The subscription allows the MS to perform the following FM services:

- FM Registration
- FM Deregistration
- FM Interrogation

5.6.2. Function checking

Generally speaking, a MS cannot perform the registration of all the functionalities defined in the SSRS. These functionalities can be split in Classes of Registration. It should be noted that not all the railway users need the FM Supplementary Services.

In the following Table the Classes of Registration are defined.

Class of Registration	Meaning
A	Engine/Train cab-radio basic functions
B	Maintenance service user
C	Operation support user
D	Customer support users

Table 1 - Class of Registration

Note: the same Class of Registration table is used for the FM Supervisor, however the FM Supervisor may have a separate supervisor specific Class of Registration field, which is checked in the case of Forced Deregistration.

Every MS has specific subscription indicators that indicate the Classes of Registration allowed.

Remark: A MS can subscribe to one or more Classes of Registration.

Table 2 shows the relation between on_train_function_code, on_engine_function_code and on_coach_function_code and Class of Registration.

Code	Functional Code Description	Basic Service/ Set of Basic Services	Default Basic Service	Class of Registration
00	spare alarm	TS11 (speech)	TS11	A
01	lead driver	TS11	TS11	A
02-05	other drivers	TS11	TS11	A
06	fax	TS62	TS62	A
07	intercom	TS11	TS11	A
08	public address	TS11	TS11	A
09	spare for intl use			
10	chief conductor (via cab radio)	TS11	TS11	C
11-19	spare for intl use (train crew)			
20	catering staff chief (via cab radio)	TS11	TS11	C
21-29	Spare for intl use (catering staff)			
30	railway security services chief (via cab radio)	TS11	TS11	D
31-39	Spare for intl use (security services)			
40	ERTMS/ETCS	BS21-26	BS25	A
41-49	Spare for intl use (ERTMS/ETCS)			
50	train borne recorder	BS21-26	BS24	A
51	diagnostics	BS25	BS25	A
52-59	Spare for intl use (on train equipment)			
60	pre-recorded passenger information	TS11	TS11	D
61	displayed passenger information unit	BS25	BS25	A
62-69	Spare for intl use (passenger services)			
70-79	spare for intl use			
80-99	spare for natl use			

Table 2: Users on Train, Engine & Coach

Table 3 shows the relation between maintenance service personnel and class of registration.

FC (Team Type + Team Member + Team Group	Description	Basic Service	CoR
1yxx - 4yxx	Reserved		
50xx	Shunting Leader	TS11	B
51xx - 53xx	Shunting Team Member	TS11	B
54xx	Train Driver	TS11	A+B
55xx	Link assurance transmitter	TS11	B
56xx - 59xx	Reserved		
6yxx - 9yxx	TBD		
0yxx	Reserved		

Table 3: Maintenance Personnel

Note: 'A+B' means the user must have CoR of A and CoR of B, not CoR of A or B

5.7. Information stored in the MS

All registered FNs shall be stored in the MS respectively on the SIM. After deregistration the corresponding FN shall be removed from the SIM. For the detailed procedure of the storage refer to section 8.1. SIMs with sufficient memory space to store all FNs, which can be registered at the same time, have to be used.

6. USAGE

6.1. General

The Functional Addressing procedure is applied to Mobile Terminating Call when the calling subscriber dials the functional_number of called party. The network shall determine the MSISDN of the mobile where the function is active.

In case of function provided by sub_port of a Mobile it is mandatory to send the function related SubAddress to the mobile. SubAddresses shall be derived from the functional_number in the VMSC, using the „originally dialled digits" contained in the IAM. The MS shall associate the SA to the sub_port of the Mobile where the function is active.

[*The basis of call barring between user types is under discussion*.]

An example of addressing to train is shown in the following figure.

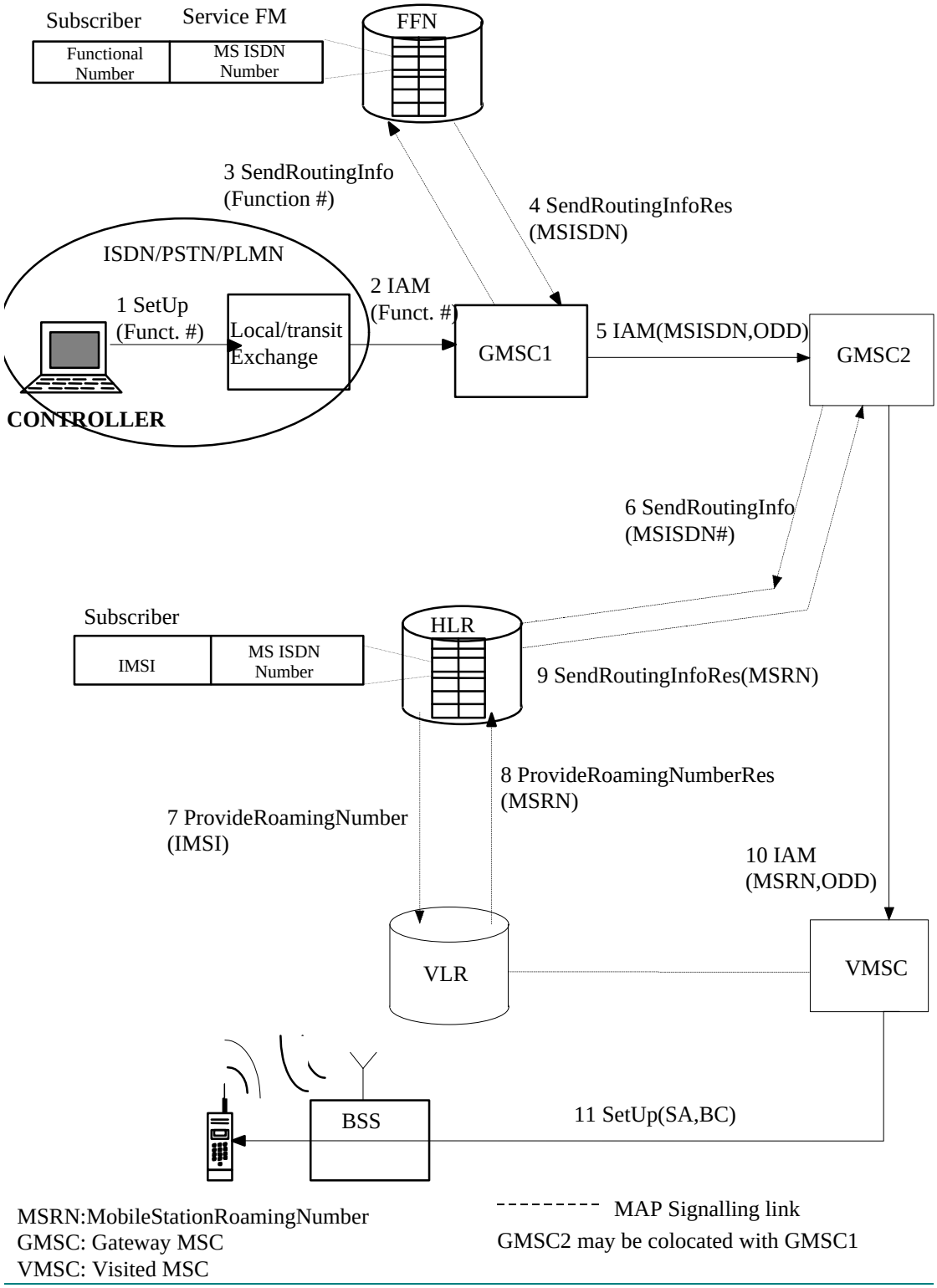

Fig. 10

6.2. Procedure in Calling User

The Calling User can be an ISDN, PSTN or PLMN user.

The following situations are possible:

1) the Calling User interfaces directly with GMSC1

2) The calling user interfaces with local and/or transit exchange belonging to his network (ISDN, PSTN or PLMN).

In all cases there are **no impacts** neither in the subscriber's procedures nor in the network's exchange procedures.

6.3. Procedure in GMSC1

No impacts but for reducing the call set-up time it is important to guarantee that no subsequent steps of routing are necessary.

In the case when a user is call forwarded to a FN, if a previous redirection is made prior to GMSC1 receiving the message, the ODD will already be populated and it should be overwritten by the FFN.

The overwrite is needed so that the VMSC can extract the Function Code from the Functional Number and do the correct FC to SA mapping in case of a preceding redirection.

6.4. Procedure in FFN

The FFN receives the SendRoutingInfo message containing functional_number from the GMSC1. The dialogue between FFN and GMSC1 is opened using standard signalling MAP (see [19]). The FFN, using the call forwarding Service activated for all services, retrieve the MSISDN Number corresponding to the functional_number received.

Successful Outcome

The FFN sends the GMSC1 the SendRoutingInfo response message containing in the RoutingInfo parameter the MSISDN in the forwardedToNumber (ISDN-AddressString) that refers to the address to which the call is to be forwarded.

Unsuccessful Outcome

In case of failure of call forwarding Service the FFN close the MAP dialogue with the GMSC1 sending the SendRoutingInfo Error containing the *UnknownSubscriber* error cause. Standard GSM procedure for unknown subscriber applies.

6.5. Procedure in GMSC2

Standard GSM procedure applies.

6.6. Procedure in HLR

Standard procedure for Single Numbering Scheme applies.

6.7. Procedure in VLR

Standard GSM procedure applies.

6.8. Procedures in VMSC

The VMSC shall be able to manage Bearer Capabilities (BC(s)) and SA. The SA is derived from the last two digits of the received „originally dialled digits" within the IAM. Those 2 last

digits are the Function Code, as specified in EIRENE. The BC(s) identifies the Basic Service required for the call. SSRS defines a relationship between SA and Basic Service (or a default Basic Service).

Successful Outcome

If the calling party is non-ISDN no BC is available at VMSC. In this case if VMSC receives the ODD, it has to retrieve the BC associated. Following procedures applies:

1) If the VMSC receive the BC and ODD no compatibility check between BC and ODD is performed and standard GSM procedure applies: the VMSC sends the SETUP message containing BC and SA.

2) If BC is not present, but ODD is received, the VMSC shall retrieve the BC from the ODD as defined in the Table 4.1.2 (see also SSRS on Numbering). The VMSC sends the SETUP message containing BC and SA

3) If there are no ODD and no BC the VMSC sends a SETUP message without BC and SA. The MS in the Call Confirm message shall insert the BC following normal procedures defined in [24] and [25].

Unsuccessful Outcome

Standard GSM procedure applies.

Note: If ODD is received and it is not possible for VMSC to retrieve the BC the VMSC sends the SetUp message containing the SA but without BC.

6.9. Procedures in BSS

Standard GSM procedure applies.

6.10. Procedures in MS

If the MS receives the SA (containing the EIRENE Function Code of the called party) it shall be able to activate the sub_port associated to the function.

7. ERROR CODES

7.1. Call Establishment

For possible error codes on the A-interface during call establishment (e.g. CM-Service-Request) see [14].

7.2. USSD

7.2.1. GSM defined Error Codes

For a complete list of possible MAP Error see [19].

7.2.2. Follow Me specific Error Codes

The Follow Me specific error codes have to be relayed to the MS using an outcome code inserted by the FFN inside the USSD string contained within the USSD ResponseB and then passed on into ResponseA. For a complete list of outcome codes see reference [23].

ANNEX 1 – Handling of network initiated USSD

A1. Handling of network initiated USSD

The network (MSC, VLR or HLR) can at any time send a USSD operation towards an MS. This operation may be either a request (asking the MS to provide information) or a notification (requiring no information in the response from the MS). No prior provision of USSD is required, although provision of services which make use of USSD may be required.

All USSD requests, notifications and responses (except responses to notifications) contain the USSD string, an alphabet indicator and language indicator.

A2 Invoking unstructured SS operation from the FFN

When an application in the FFN is to send a USSD request or notification to an MS, it shall set up a transaction to the VLR where the subscriber is currently registered and send the operation to the VLR. It shall then await a response. The HLR is responsible for controlling the transaction, and shall therefore normally release the transaction when it receives a response from the VLR. The HLR may also release the transaction before receiving a response if necessary (e.g. if an

application timer expires).

A3 Handling of unstructured SS operation at the MS

The MS may at any time receive a USSD operation (request or notification) from the MSC.

If the MS receives a USSD transaction while another USSD transaction (network or mobile initiated) or a non-call related supplementary service transaction is in progress, the MS shall reject the new transaction.

If the MS receives a USSD operation when it is in a state where the MMI required is not possible (e.g. during dialing) it shall reject the operation.

If the MS does not support the alphabet indicated in the USSD operation, it shall inform the network.

If the MS is in a state where it can handle the operation, it shall process the operation as follows:

- For a USSD notification, the MS shall send the information to a mobile application and send back a response.

After sending the response to a USSD operation, the MS shall wait for the network to release the transaction. If, while awaiting this release, the MS receives any further USSD operations, it shall process them in the normal way.

A4 Structure for Network initiated USSD notification

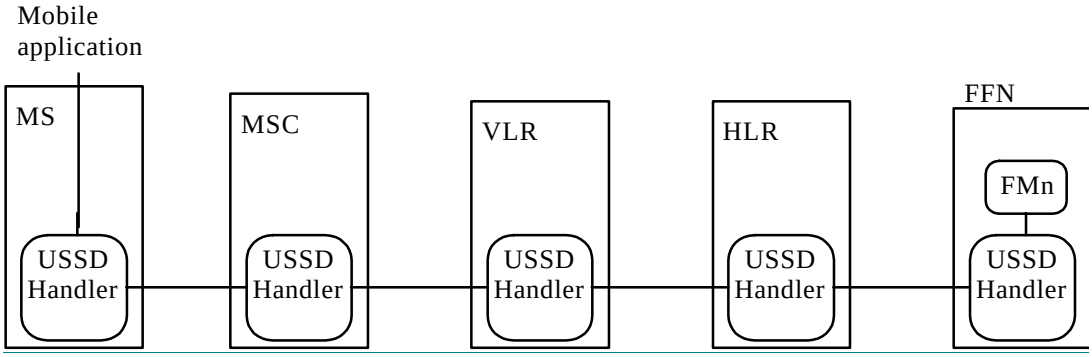

A5 Message flow for Network initiated USSD notification

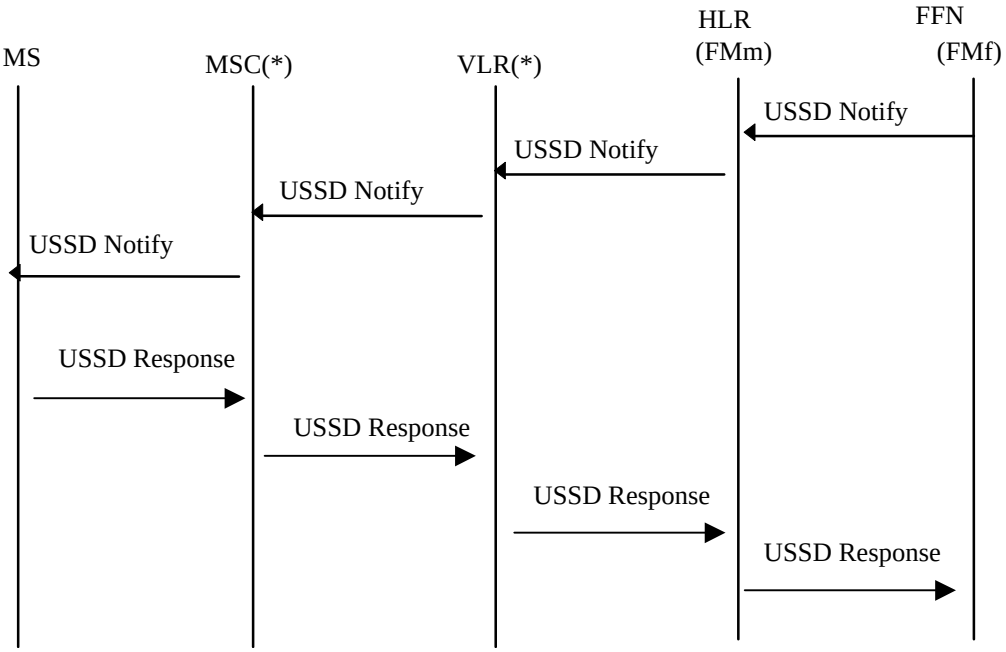

A6 Interface between MS and Network

Figure 5 shows the interface between MS and Network.

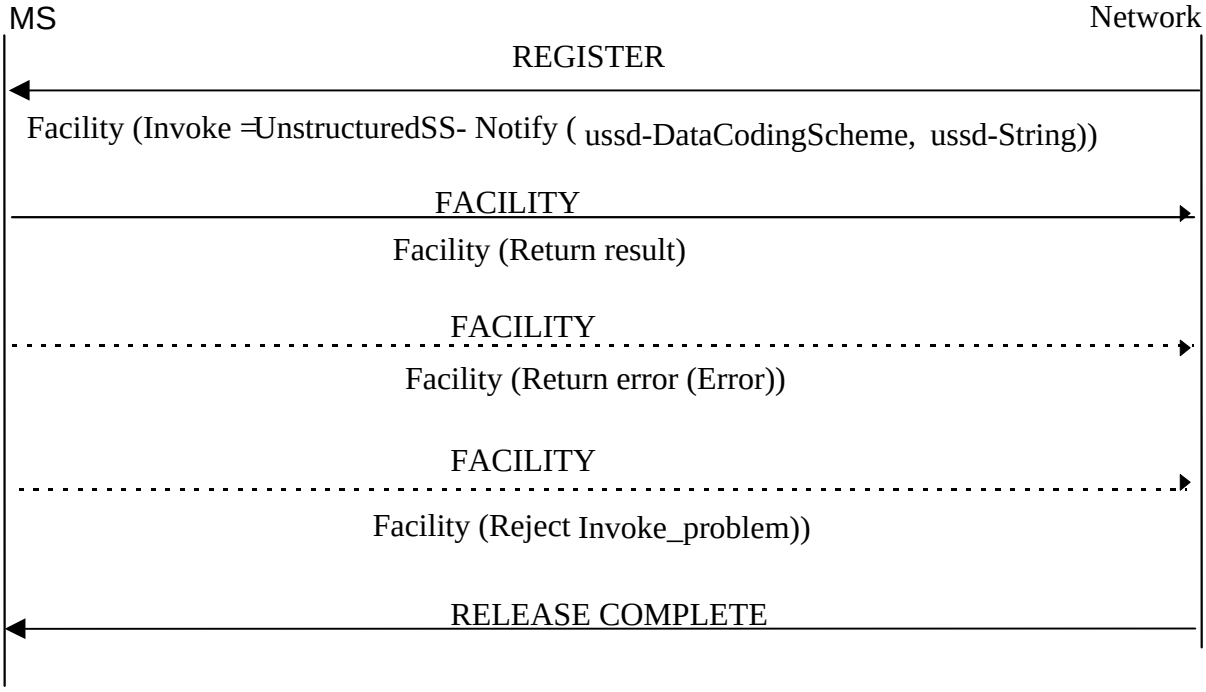

Fig. 5: Single network initiated USSD operation

NOTE: The mobile station may clear the transaction at any time by sending a RELEASE COMPLETE upon request of the user.

ANNEX 2 – Additional procedure for Notification on forced deregistration

There are only a few cases where the notification could fail and therefore the network & terminal FN lists are out of synchronisation.

1. If the mobile station has lost coverage, it could happen that a USSD notification from the network is not received.

2. The mobile is not able to process the incoming USSD notification and send back to the network a return error.

To cover case 1 the mobile shall, after it returned into coverage of a GSM-R network, perform following action:

- In case of a Cab Radio, the application program shall interrogate all of the FN stored on the SIM belonging to the same ROOT (train running number, ref. ch. 5.4.2 procedure in MS).

- All other MS shall interrogate all FN's stored on the SIM if the MS was out of coverage for more than 5 minutes.

The procedure will clarify the status of the registered functional numbers.

In case 2 the network shall repeat the USSD notify message.