REFERENCE **I 13/3 T 6001 2**		
Name of WP/Activity WP13 Radio transmission FIS and FFFS finalisation: **Direct Mode**		**Contract:** **DGVII** **WP/ACT:**
Company/organisation KAPSCH	**Team**	**MORANE** **WP/ACTIV:** **WP13/3**

FFFIS for DIRECT MODE

15TH FEBRUARY 1999

ACCESS: ❑ Public ☑ Restricted ❑ Confidential

	NAME	DATE	VISA
Author	KAPSCH	15th February 1999	KAPSCH
Reviewed	MORANE TGLs	15th February 1999	MORANE TGLs
Approval	R. Sarfati	4th October 1999	

This document, property of MORANE, can not be used or duplicated without prior authorisation

EVOLUTION SHEET

Version	Date	Author	MODIFICATION
A	21/10/1996	KAPSCH	Creation
B	29/11/1996	KAPSCH	changes agreed on review
C	21/11/1997	KAPSCH	minor changes
1	24/11/1997	KAPSCH	first issue
2	15/02/1999	KAPSCH	Minor changes

This document, property of MORANE, can not be used or duplicated without prior authorisation

TABLE OF CONTENTS

1 SCOPE ____ *4*

2 REFERENCE DOCUMENTS ____ *5*

3 DEFINITIONS, TERMINOLOGY AND ABBREVIATIONS ____ *6*

4 MAIN CONCEPTS ____ *7*

5 TECHNICAL CHARACTERISTICS ____ *7*

5.1 Radio Parameters ____ **7**

5.1.1 Frequency Range ____ 7

5.1.2 Channel Spacing ____ 7

5.1.3 Modulation ____ 8

5.1.4 Transmitter Power ____ 8

5.1.5 Receiver Sensitivity ____ 8

5.2 Mode of Operation ____ **8**

5.3 Electrical Characteristics ____ **8**

6 FUNCTIONAL DESCRIPTION ____ *9*

6.1 Interaction with GSM-R ____ **9**

6.2 Gaining Access to Direct Mode ____ **9**

6.3 Leaving Direct Mode ____ **9**

6.4 Shunting Link Assurance Signal ____ **9**

6.5 ____ **9**

6.6 Range of Operation ____ **9**

7 ANNEX A ____ *10*

7.1 Architecture of a Dual Mode Cab Radio (Example) ____ **10**

7.2 Architecture of a Dual Mode Handheld MS (Example) ____ **10**

7.3 Speed considerations ____ **11**

This document, property of MORANE, can not be used or duplicated without prior authorisation

1. SCOPE

This Form Fit Functional Specification (FFFS) and Functional Interface Specification (FIS) aims to specify the functions required for direct mode.

Direct mode shall provide :

- short range communication in the case that primary GSM-R facilities fail and there are no fall-back GSM-R facilities;

- short range communication in remote areas without GSM coverage.

For a number of currently available technologies their suitability for direct mode has been analysed. Due to the strong constraints given in the requirements the most convincing results appeared for analogue FM technology.

Using a narrow-band FM transceiver for direct mode operation offers a very reliable, well proofed, economic and uncomplicated communication link.
Nevertheless adequate rules will have to be elaborated in order to keep the direct mode communication disciplined and maximum efficient. Those rules are not subject of this document.

This document, property of MORANE, can not be used or duplicated without prior authorisation

2. REFERENCE DOCUMENTS

[0]	EIRENE	Draft System Specification v9.0 AA385D011 14. July 97
[1]	MORANE	SSRS v2.0 19. March 97
[2]	MORANE	Technical Design Guide (WP02/DGVII) p10
[3]	RES ETS 300 086	Technical characteristics and test conditions for radio equipment with an internal or external RF connector intended primarily for analogue speech
[4]	RES pr ETS 300 279	Electromagnetic compatibility (EMC) for private land mobile radio (PMR) and ancillary equipment (speech and/or non speech)
[5]	SMG2 TDoc(91) 10 rev 1	Urban transmission loss models for mobile radio in the 900- and 1800-MHz bands

This document, property of MORANE, can not be used or duplicated without prior authorisation

3. DEFINITIONS, TERMINOLOGY AND ABBREVIATIONS

open channel mode	Unprotected form of wireless communication that does not restrict the number of listeners. Everybody with the suitable equipment is able to participate on the communication.
half duplex mode	RF link that uses a single frequency for alternate transmission and reception.
dual mode radio	Piece of equipment that combines the capabilities for both direct mode and GSM mode. The two modes can not be fully active at the same time.
GSM-mode	Normal GSM-R operation.
direct mode	A way of communication via a half duplex RF channel in open channel mode that does not need fixed infrastructure.
receive state	Push-to-talk button released, squelch function un-mutes audio path; transmitter is disconnected.
transmit state	Push-to-talk button pressed, receiver is disconnected.
idle state	Ready to receive, push-to-talk button released, squelch function mutes audio path (no information is transferred).

BCCH	Broadcast Control Channel
CW	Call Waiting
FM	Frequency Modulation
kph	kilometres per hour
MMI	Man Machine Interface
MS	Mobile Station
PLMN	Public Land Mobile Network
RF	Radio Frequency
E-TACS	Total Access Communication System in the extended frequency range

This document, property of MORANE, can not be used or duplicated without prior authorisation

4. MAIN CONCEPTS

As GSM does not offer direct mode facilities there is a demand for additional equipment.
The integration of the additional equipment is planned by combining a DIRECT MODE radio and a GSM-R MS.

Important note:
Direct Mode shall use exclusively the frequency bands assigned to railways for GSM-R. Whether national or international rules restrict the usage of this bands for other than GSM modulation is out of scope of this document.

5. TECHNICAL CHARACTERISTICS

5.1. Radio Parameters

5.1.1. Frequency Range

The frequency range of the direct mode transceiver shall cover the entire GSM-R uplink frequency band from 876.0 to 880.0 MHz.

5.1.2. Channel Spacing

The variant B can be considered as subsets of variant A. The selection between them could be done when configuring the mobile by maintenance personnel.

5.1.2.1. Variant A

All the GSM-R uplink band is used (876 - 880 MHz).
12,5 kHz channel spacing shall be used according ref. [3].
Characteristics:
- more than 300 direct mode channels
- keeps the direct mode equipment in line with ref. [3]

This document, property of MORANE, can not be used or duplicated without prior authorisation

5.1.2.2. Variant B

Only the GSM-R guard-band shall be used (876.000 - 876.200 MHz).
12,5 kHz channel spacing shall be used according ref. [3].
Characteristics:

- no interference with GSM uplink-channels
- misuse impossible
- a total of 5 direct mode channels

The total amount of available channels is, of course, 16. In order to avoid interferences the idea is to leave unused the band between 876.1÷876.2 and the lower band around 876.0. The following table indicates the foreseen channels:

N°	1	2	3	4	5
Freq. MHz	876.0125	876.0250	876.0375	876.0500	876.0625

5.1.3. Modulation

Narrow-band frequency modulation. For details see ref. [3].

5.1.4. Transmitter Power

For any MS the transmitter power shall be 1 W.

5.1.5. Receiver Sensitivity

The sensitivity of direct mode receivers shall be -107 dBm [3] or better.
With the figures in 5.1.4 and 5.1.5 direct mode will cover a range of at least 2 km in open terrain for all atmospheric conditions.
For calculations see ref. [5].

5.2. Mode of Operation

Half duplex (refer to definition in chapter 3)

5.3. Electrical Characteristics

The electrical characteristics shall meet the specifications given in ref. [3] and ref. [4].

This document, property of MORANE, can not be used or duplicated without prior authorisation

6. FUNCTIONAL DESCRIPTION

6.1. Interaction with GSM-R

The re-establishment of a GSM-R network shall be detected and indicated to direct mode users. No automatic switching between direct mode and GSM mode shall be performed.
If simultaneous coexistence of GSM-R and direct mode is necessary, adequate cell planning has to guarantee a sufficiently low level of mutual interference.

This can be achieved by using the guard band channels only in case of an operational network. If there are remaining direct mode channels implemented those shall be barred temporarily. This action has to be taken by the Direct Mode equipment itself.

6.2. Gaining Access to Direct Mode

One direct mode channel shall be serving as a common access channel.
For example direct mode communication could start with a request for the desired partner on this access channel. If the desired partner is located within the coverage area of direct mode radio and not already engaged he shall respond on the access channel.
After responding, both parties may change to another free traffic channel.

6.3. Leaving Direct Mode

Direct mode can be left by switching off the equipment or by changing to GSM-R operation.

6.4. Shunting Link Assurance Signal

The shunting link assurance signal shall be represented by an in-band audio tone according to GSM-mode.

6.5.

Left intentionally blank

6.6. Range of Operation

Referring to calculations in ref. [5] and specified values for receiver sensitivity and transmitter power a range of at least 2 km shall be covered.

This document, property of MORANE, can not be used or duplicated without prior authorisation

7. ANNEX A

7.1. Architecture of a Dual Mode Cab Radio (Example)

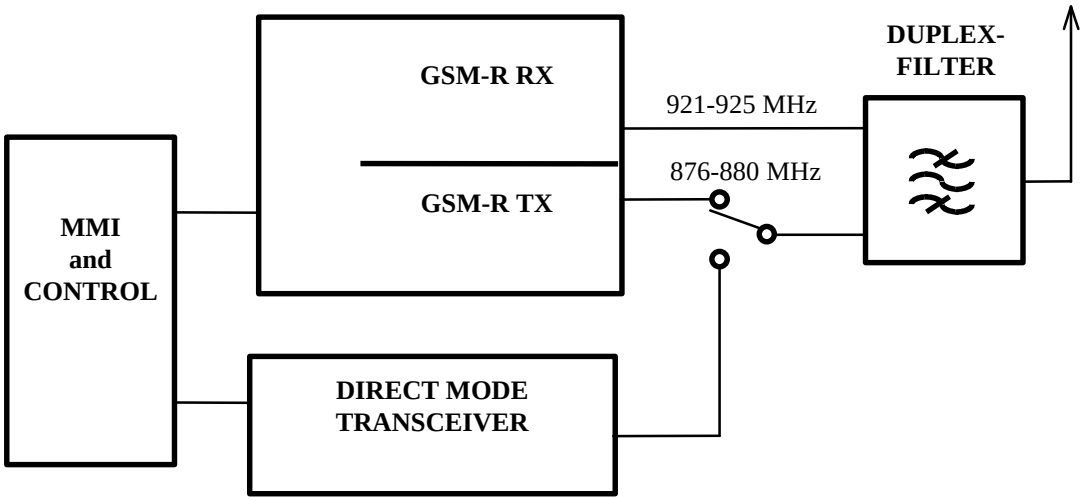

Figure 1**: Simplified block diagram of a dual mode MORANE cab radio**

7.2. Architecture of a Dual Mode Handheld MS (Example)

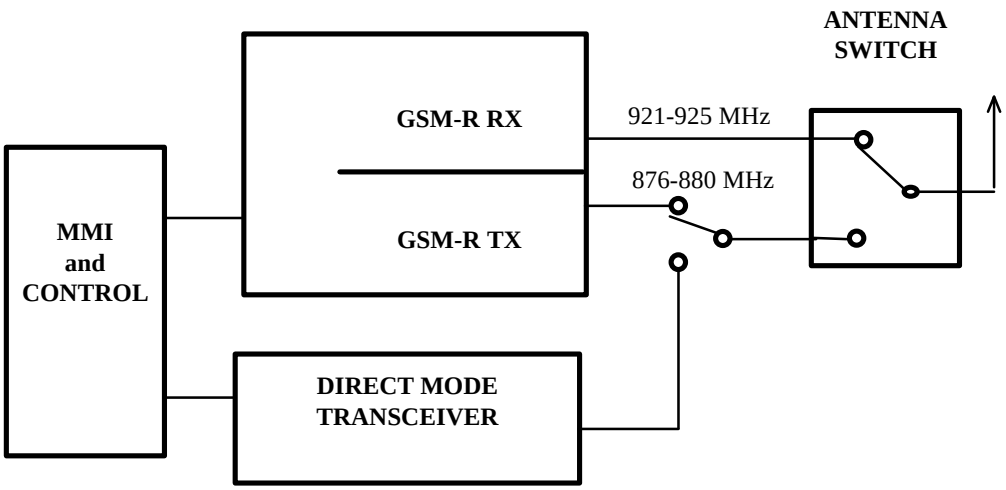

Figure 2**: Simplified block diagram of a dual mode MORANE handheld radio**

This document, property of MORANE, can not be used or duplicated without prior authorisation

7.3. Speed considerations

Doppler shift does not add any limitations up to a velocity of 500 kph.
Speed however limits the time that a moving vehicle spends in a coverage area

	max. duration of connection [s]	
Velocity [kph]	**Train to ground**	**trains driving towards each other**
50	288	144
100	144	72
200	72	36
300	48	24
500	28,8	14,4

Table 1**: Maximum duration of a connection for a range of operation of 2 km**

This document, property of MORANE, can not be used or duplicated without prior authorisation