REFERENCE A 11 T 6001 12	INTERNATIONAL UNION OF RAILWAYS
Name of WP **EuroRadio Interface Group**	
Company / organisation **UIC ERTMS/GSM-R** **UNISIG**	

Radio Transmission FFFIS for EuroRadio

ACCESS : ☑ Public ☐Restricted ☐Confidential

	NAME	DATE	VISA
Author	EuroRadio Interface Group UNISIG	2003	
Reviewed	EuroRadio Interface Group UNISIG	2003	
Approval	ERTMS/GSM-R Operators Group	2003	
Approval	UNISIG Steering Committee	2003	

EVOLUTION SHEET

Version	Date	Author	MODIFICATION
1	22 March 2002	EuroRadio Interface Group	First version based on MORANE FFFIS
2	6 May 2002	EuroRadio Interface Group	Second version
3	22 May 2002	EuroRadio Interface Group	Third version
4	04 June 2002	EuroRadio Interface Group & UNISIG	Fourth version based on comments received during 30/31 May Workshop
5	16 Sept 2002	EuroRadio Interface Group & UNISIG	Fifth version based on comments received by UNISIG
6	24 September 2002	EuroRadio Interface Group & UNISIG	Sixth version based on comments received during meeting #2
7	04 November 2002	EuroRadio Interface Group & UNISIG	Seventh version based on comments received by UNISIG
8	17 December 2002	EuroRadio Interface Group & UNISIG	Eighth version
9	13 January 2003	EuroRadio Interface Group & UNISIG	Ninth version
10	30 March 2003	EuroRadio Interface Group & UNISIG	Tenth version
11	02 April 2003	EuroRadio Interface Group & UNISIG	Eleventh version
11A	25 July 2003	EuroRadio Interface Group & UNISIG	Preliminary version as approved at ad hoc group level
11B	31 July 2003	EuroRadio Interface Group & UNISIG	Version for formal approval by IG and UNISIG
11C	4 August 2003	EuroRadio Interface Group & UNISIG	Modification of § 6.4.
12	12 09. 2003	EuroRadio Interface Group & UNISIG	Approved version for TSI

TABLE OF CONTENTS

1. INTRODUCTION. 6

1.1. Scope. 6

1.2. Reference documents 7

1.3. Normative References. 8

1.4. Abbreviations and Definitions. 10
1.4.1. Abbreviations. 10
1.4.2. Definitions. 12
1.4.3 Applicability 13

2. EURORADIO REQUIREMENTS 14

2.1. Bearer services and teleservices 14
2.1.1. Service Requirements 14
2.1.2. Service Access 14

2.2. Signalling 14
2.2.1. I_{GSM} 14
2.2.2. I_{FIX} 15

2.3. Supplementary Services and Railway specific services 15

2.4 Handling of Classmark 2 Information Element 16

3. I_{FIX} SPECIFICATION 17

3.2. Data Transmission on the Interface 17

3.3. Signalling Transmission on the Interface 17
3.3.1. Originating Call Establishment 17
3.3.2. Terminating Call Establishment 18
3.3.3. Call Clearing 18
3.3.3.1. Clearing Initiated by the User 18
3.3.3.2. Clearing Initiated by the Network 18
3.3.3.3. Clear Collision 19
3.3.4. Message Functional Definition and Contents 19
3.3.4.1. Sequences of Messages 19
3.3.4.2. Information Elements in the SETUP Message 22
3.3.4.2.1 Bearer and Low layer capability information element 22
3.3.4.2.2 Called party number 24
3.3.4.2.3 Calling Party Number 24
3.3.4.2.4. Priority 25
3.3.4.2.5. User-User Information Element 25

4.1. Interface Architecture 27

4.2. Interface Definition 28
4.2.1. Functional Properties 28
4.2.2. Electrical Properties 28

4.2.3. Mechanical Properties 29

4.3. Data Transmission on the Interface 29
4.3.1. Used Circuits 29
4.3.2. Data Format for Asynchronous Operation 30

4.4. Signalling Transmission on the Interface 30
4.4.1. Physical Layer 30
4.4.1.1. Used Circuits 30
4.4.1.2. Character Framing: formats for Asynchronous Operation 31
4.4.2. AT Command Syntax and Procedures 32
4.4.2.1. Alphabet 32
4.4.2.2. Command Lines 32
4.4.2.3. Basic Syntax Commands 32
4.4.2.4. Extended Syntax Commands 32
4.4.2.5. Issuing Commands 32
4.4.2.6. Executing Commands 32
4.4.2.7. MT2 Responses 32
4.4.3. TE-TA interface commands 33
4.4.4. Result Codes 34
4.4.5. Originating Call Establishment 35
4.4.5.1. Select Bearer Service Type 35
4.4.5.2. Dial Command 35
4.4.5.3. Select Priority Level 36
4.4.5.4. Connected Line Identification Presentation 36
4.4.6. Terminating Call Establishment 37
4.4.6.1. Automatic answer 37
4.4.6.2. Calling Line Identification Presentation 37
4.4.6.3. Incoming Call Priority Presentation 38
4.4.6.4. Cellular result codes 38
4.4.6.5 Answer 39
4.4.7. Call Clearing 40
4.4.8. ITU V.25ter DTE-DCE interface commands 40
4.4.8.1. Command echo 40
4.4.9. ITU V.25ter Generic DCE control commands 40
4.4.9.1. Reset to user default configuration 40
4.4.9.2. Set to factory-defined configuration 40
4.4.10. Network service related commands 41
4.4.10.1. Subscriber number +CNUM 41
4.4.10.2. Network registration +CREG 41
4.4.10.3. Operator selection +COPS 42
4.4.11. Mobile Equipment control and status commands 44
4.4.11.1. Phone activity status +CPAS 44
4.4.11.2. Signal quality +CSQ 44
4.4.12. Mobile Equipment errors 44
4.4.12.1. Mobile Equipment errors +CMEE 44
4.4.13 Call control commands and DCE control commands 45

4.5. MT2 Start-up procedure 46

5. MESSAGE FLOWS 47

5.1. Calls Originated from Trackside to Trainside 47

5.2 Calls Originated from Trainside to Trackside 48
5.2.1 Example: V.110 signaling during a MOC 49

6. NUMBERING AND ADDRESSING 50

ANNEX A: SYSTEM ARCHITECTURE **51**

A.1. Overall Architecture **51**

A.2. GSM-R Network **51**
A.2.1. GSM-R Architecture 52
A.2.2. GSM-R Terminals 53
A.2.3 On board architecture 53

A.3. GSM-R Network Termination (NT1) **54**
A.3.1. ISDN Interface (I_{FIX}) 54

ANNEX B: FEATURES REQUIRED FOR ERTMS CLASS 1 **55**

1. INTRODUCTION.

1.1. Scope.

1.1.1 This Form Fit Functional Interface Specification (FFFIS) defines the interfaces of the EuroRadio module and GSM-R network terminations and includes, in chapter 2, the Radio Communication System requirements to the airgap interface details that are required for the UNISIG class 1 ERTMS system definition.

1.1.2 This FFFIS covers the EuroRadio / transmission system interface functionality and covers:

- Interface requirements
- Physical, Mechanical and Electrical properties
- Protocols and procedures (e.g. Call Establishment/Clearing)
- Services
- Numbering and addressing.

1.1.3 The only EuroRadio interfaces relevant to this FFFIS are I_{FIX} and I_{GSM}, that are directly connected to the transmission system, as depicted in the following figure:

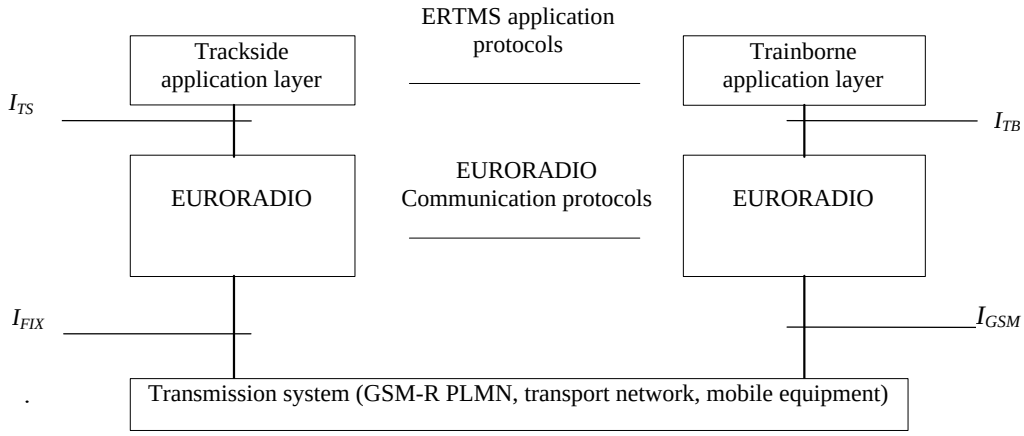

Figure. 1.1: EuroRadio interfaces

1.1.4 In considering all the messages which pass across the interfaces between the EuroRadio and the transmission system, only those which are utilised either to control the transmission system or are generated by the transmission system itself are relevant to this FFFIS.

1.1.5 Although messages sent between the EuroRadio (or higher layer) units pass across the I_{FIX} and I_{GSM} interfaces, their content is not relevant to the transmission system itself, since they are conveyed transparently. These messages are classified as EuroRadio specific and are outside the scope of this FFFIS.

1.2. Reference documents

1.2.1 This FFFIS incorporates dated or undated references. These normative references are cited at the appropriate place in the text and the publications are listed hereafter. For dated references, subsequent amendments to or revisions of any of these publications apply to this FFFIS only when incorporated in it by amendment or revision. For undated references the latest edition of the publication referred applies.

Reference	Document Title	Document Number	Issue	Date	Author
	EuroRadio FFFIS Class 1 Requirements	Subset 052	2.0.0	30 March 2000	UNISIG
[1]	System Requirement Specification	Subset 026	2.2.2	1 Feb. 2002	UNISIG
[2]	FFFS for Location Dependent Addressing FIS for Location Dependent Addressing	MORANE/ F 10 T 6001 MORANE/ F 12 T 6001	3 2	17 May 2000 31 July 2000	MORANE MORANE
[3]	System Requirement Specification	EIRENE MDA029D010	13.0	15 Dec. 2000	EIRENE
	Functional Requirement Specification	EIRENE MDA029D009	5.0	20 Dec. 2000	EIRENE
	EuroRadio FIS	Subset 037	2.2.2	31 Mar. 2003	UNISIG

1.3. Normative References.

1.3.1 The following is a list of normative reference specifications referred to within this FFFIS:

SPEC.	NUMBER	TITLE
ETS	300 011	Integrated Services Digital Network (ISDN); Primary Rate User-Network Interface, Layer 1 Specification and Test Principles
	300 092-1	Integrated Services Digital Network (ISDN); Calling Line Identification Presentation (CLIP) Supplementary Service; Digital Subscriber Signalling System No. One (DSS1) Protocol; Part 1: Protocol Specification
	300 097-1	Integrated Services Digital Network (ISDN); Connected Line Identification Presentation (COLP) Supplementary Service; Digital Subscriber Signalling System No. One (DSS1) Protocol; Part 1: Protocol Specification
	300 102-1	Integrated Services Digital Network (ISDN); User-Network Interface Layer 3, Specification for Basic Call Control
	300 125	Integrated Services Digital Network (ISDN); User-Network Interface Data Link Layer Specification Application of CCITT Recommendations Q.920/I.440 and Q.921/I.441
	300 286-1	Integrated Services Digital Network (ISDN); User-to-User Signalling (UUS) Supplementary Service; Digital Subscriber Signalling System No. One (DSS1) Protocol; Part 1: Protocol Specification
EN	300 403-1	Integrated Services Digital Network (ISDN); Digital Subscriber Signalling System No. one (DSS1) protocol; Signalling network layer for circuit-mode basic call control; Part 1: Protocol specification
GSM	02.02	(ETS 300 501) Bearer Services supported by a GSM PLMN
	02.03	(ETS 300 502) Teleservices supported by a GSM PLMN
	02.30	(TS 100 907) Man-Machine interface (MMI) of the mobile Station (MS)
	02.67	(Enhanced Multi-Level Precedence and Preemption service (eMLPP)
	03.10	GSM Public Land Mobile Network (PLMN) connection types
	04.02	(ETS 300 551) GSM PLMN Access Reference Configurations
	04.04	(ETS 300 553) MS-BSS layer 1 - General Requirements
	04.05	(ETS 300 554) MS-BSS data link layer - General Aspects
	04.06	(ETS 300 555) MS-BSS data link layer - Specification
	04.07	(ETS 300 556) Mobile Radio Interface Signalling Layer 3 - General Aspects
	04.08	(ETS 300 557) Mobile Radio Interface Layer 3 – Specification

	04.21	(ETS 300 562) Rate Adaptation on the MS-BSS Interface

SPEC.	NUMBER	TITLE
GSM (cont.)	04.22	(ETS 300 563) Radio Link Protocol for Data and Telematic Services on the MS-BSS Interface
	07.01	(ETS 300 582) General on Terminal Adaptation functions for MSs
	07.02	(ETS 300 583) Terminal Adaptation Functions for Services using Asynchronous Bearer Capabilities
	09.03	Signalling requirements on interworking between the ISDN or PSTN and the PLMN
3GPP	27.007	(TS 127 007*)* AT command set for GSM Mobile Equipment (ME).
ISO	1177	Information processing: Character structure for start/stop synchronous character oriented transmission
	2110 Amend.1	Information technology: Data communications 25 pole DTE/DCE interface connector and contact number assignment
ITU-T	I.255.3	ISDN general structure and service capabilities Multi-Level Precedence and Preemption Service (MLPP)
	I.411	ISDN user-network interface: Reference configurations
	I.412	ISDN user-network interfaces: Interface structures and access capabilities
	I.431	Primary rate user-network interface – Layer 1 specification
	Q.850 (1993)	Stage 2 description for community of interest Supplementary Services Section 3 – MultiLevel Precedence and Preemption (MLPP) (rev.1)
	Q.930	ISDN user-network interface layer 3: General aspects
	Q.931 (3/93)	Digital Subscriber Signalling System No.1 ISDN User-Network interface layer 3 specification for basic call control
	Q.932	General procedures for the control of ISDN supplementary services
	Q.955	Digital Subscriber Signalling System No.1 Stage 3 Description for Supplementary Services Using DSS1
	V.4	General structure of signals of international alphabet No. 5 code for character oriented data transmission over public networks
	V.11	Electrical characteristics for balanced double-current interchange circuits for general use with integrated circuit equipment in the field of data communications

SPEC.	NUMBER	TITLE
ITU-T (cont.)	V.24	List of definitions for interchange circuits between data terminal equipment (DTE) and data circuit-terminating equipment (DCE)
	V 25ter	Serial asynchronous dialling and control.
	V.28	Electrical characteristics for unbalanced double-current interchange circuits
	V.110	Support of data terminal equipments (DTEs) with V-series type interfaces by an integrated services digital network (ISDN)
	X.1	International user classes of service in public data networks and integrated services digital networks (ISDNs)
	X.30	Support of X.21 and X.21bis based data terminal equipments (DTEs) by the integrated services digital network (ISDN)
	X.200	Reference model of open systems interconnection for CCITT applications

1.4. Abbreviations and Definitions.

1.4.1. Abbreviations.

AT	**AT**tention command set
AuC	**Au**thentication **C**entre (a GSM entity)
B channel	User channel of ISDN
B_m channel	User channel of GSM PLMN
BS	**B**earer **S**ervice
BSC	**B**ase **S**tation **C**ontroller (a GSM entity)
BSS	**B**ase **S**tation **S**ub-system (a GSM entity)
BTS	**B**ase **T**ransceiver **S**tation (a GSM entity)
CCITT	**I**nternational **T**elegraph and **T**elephone **C**onsultative **C**ommittee
CLIP	**C**alling **L**ine **I**dentification **P**resentation (GSM/ISDN service).
CoLP / COLP	**CO**nnected **L**ine Identification **P**resentation (GSM/ISDN service).
DCE	**D**ata **C**ircuit **E**quipment
D channel	Control channel of ISDN
D_m channel	Control channel of GSM PLMN
DTE	**D**ata **T**erminal **E**quipment
EF	Sim Card **E**lementary **F**ile
EIR	**E**quipment **I**dentification **R**egister (a GSM entity)

eMLPP	**e**nhanced **M**ulti-**L**evel **P**recedence and **P**re-emption (GSM service)
ERTMS	**E**uropean **R**ail **T**raffic **M**anagement **S**ystem
ETCS	**E**uropean **T**rain **C**ontrol **S**ystem
ETS	**E**uropean **T**elecommunication **S**tandard
ETSI	**E**uropean **T**elecommunications **S**tandards **I**nstitute
FACCH	**F**ast **A**ssociated **C**ontrol **C**hannel
FFFIS	**F**orm **F**it Functional **I**nterface **S**pecification
FFS	**F**or **F**urther **S**tudy
FIS	**F**unctional **I**nterface **S**pecification
GPRS	**G**eneral **P**acket **R**adio **S**ervice
GSM-R	**G**lobal **S**ystem for **M**obile communication - Railways
HDLC	**H**igh level **D**ata **L**ink **C**ontrol
HLR	**H**ome **L**ocation **R**egister (a GSM entity)
I_{FIX}	(Trackside) EuroRadio **I**nterface (ISDN/PSTN)
I_{GSM}	(Trainborne) EuroRadio **I**nterface (GSM PLMN)
I_{TB}	Trainborne Interface between EuroRadio and ERTMS Application
I_{TS}	Trackside Interface between EuroRadio and ERTMS Application
ISDN	**I**ntegrated **S**ervices **D**igital **N**etwork
ISO	**I**nternational **S**tandards **O**rganisation
ITU-T	**I**nternational **T**elecommunication **U**nion **- T**elecommunication standardisation sector
MCC	**M**obile **C**ountry **C**ode
ME	**M**obile **E**quipment
MLPP	**M**ulti-**L**evel **P**recedence and **P**re-emption (ISDN service)
MNC	**M**obile **N**etwork **C**ode
MOC	**M**obile **O**riginated **C**all
MS	**M**obile **S**tation (a GSM entity)
MSC	**M**obile **S**witching **C**entre (a GSM entity)
MSISDN	**M**obile **S**tation **ISDN** number
MT	**M**obile **T**ermination/**T**erminated
MTC	**M**obile **T**erminated **C**all
NCC	**N**ational **C**ountry **C**ode
NDC	**N**ational **D**estination **C**ode
NSS	**N**etwork **S**ub-**S**ystem (a GSM entity)
NT	**N**etwork **T**ermination
OBU	**O**n **B**oard **U**nit
OMSS	**O**peration and **M**aintenance **S**ub-**S**ystem (a GSM entity)
OSI	**O**pen **S**ystem **I**nterconnection
PLMN	**P**ublic **L**and **M**obile **N**etwork

PIN	**P**ersonal **I**dentity **N**umber
POI	**P**oint **O**f **I**nterconnection
PRA	**P**rimary **R**ate **A**ccess
PSTN	**P**ublic **S**witched **T**elephone **N**etwork
QoS / QOS	**Q**uality **o**f **S**ervices
RA / RA0	**R**ate **A**daptation
RBC	**R**adio **B**lock **C**entre
RBCN	**R**adio **B**lock **C**entre **N**umber
SN	**S**ubscriber **N**umber
SRS	**S**ystem **R**equirement **S**pecification
SS	**S**upplementary **S**ervice(s)
SSRS	**S**ub-**S**ystem **R**equirement **S**pecification
TA	**T**erminal **A**daptor/**A**daptation
TBR	Technical Basis for Regulation
TCH	**T**raffic **CH**annel
TE	**T**erminal **E**quipment
UIC	**U**nion **I**nternationale des **C**hemins de Fer
Um	GSM air interface
UUS	**U**ser-to-**U**ser **S**ignalling (ISDN service)
VBS	**V**oice **B**roadcast **S**ervice
VGCS	**V**oice **G**roup **C**all **S**ervice
VLR	**V**isitor **L**ocation **R**egister (a GSM entity)
WP	**W**ork **P**ackage

1.4.2. Definitions.

AT COMMAND SET An internationally accepted command language, originally for use with intelligent modems. [V25ter]

COLP: The COLP supplementary service is a supplementary service offered to the calling user. It provides the connected user's number. The COLP supplementary service is not a dialling check, but an indication to the calling user of the connected address. The connected line identity will include all the information necessary to unambiguously identify the connected line. The COLP supplementary service uses a signalling protocol Information Element which is transported in a CONNECT message (both at UNI and NNI).

DATA: Information and control signals passed by electronic means. They can include short formatted data messages; data file transfer; interactive computer operation; text messaging; alarms; and remote-control applications.

ERROR: An error is that part of the system state which is liable to lead to failure. A transmission error occurs if the received message is different from the transmitted message.

EUROPEAN RAIL TRAFFIC MANAGEMENT SYSTEM (ERTMS): A harmonised means of controlling and managing railway traffic in Europe.

HANDOVER: The process of automatically transferring a transaction in progress (a call in particular) from one radio cell to another.

IDENTIFICATION: The recognition of an entity (with a distinguishing identifier) by another entity.

INTERFACE: The point at which two or more systems or subsystems meet.

MESSAGE: A complete data packet passed from one entity to another.

POINT OF INTERCONNECTION: Is the point where the GSM-R network (or eventually the transport network) and the EURORADIO trackside network are physically linked.

TRANSMISSION SYSTEM: The communication system/network bounded by, but excluding the trackside and trainborne EuroRadio layers.

USER: A user can be an application or a person.

1.4.3 Applicability

The statements made in the specification are assigned to one of three categories:

Mandatory (indicated by '(M)' at the end of the paragraph). Mandatory means that these specifications have to be meet where interoperability is required.

Optional (indicated by '(O)' at the end of the paragraph). Whilst not being mandatory for interoperability, these specifications shall be met if implemented, both to provide a consistent service and to present a recognised and agreed standard to manufacturers in order to facilitate the integration between equipment constituting part of the system, obtain economies of scale in development and manufacture.

Information (indicated by '(I)' at the end of the paragraph). These are statements intended to provide explanatory notes.

2. EURORADIO REQUIREMENTS

2.0.1 This specification addresses the Point to Point data services. Packet Data Services are not currently considered to be within the scope of this specification

2.0.2 This chapter provides a concise overview of the requirements of the I_{GSM} and I_{FIX} interfaces, based mainly on the stipulations within [1].

2.1. Bearer services and teleservices

2.1.1. Service Requirements

2.1.1.1 Of the GSM bearer services (BSs) as defined in GSM 02.02 (ETS 300 501), the following asynchronous data services are to be used:

- BS24: Asynchronous data 2.4 kbit/s (O)
- BS25: Asynchronous data 4.8 kbit/s (M)
- BS26: Asynchronous data 9.6 kbit/s (M)

2.1.1.2 The GSM data services shall be transparent, as defined in GSM 04.22 (ETS 300 563). (M)

2.1.1.3 The GSM radio channel shall be full rate (M)

2.1.1.4 GPRS, or variants of it, could be used in the future (FFS).

2.1.2. Service Access

2.1.2.1 The GSM bearer services defined in 2.1.1.1 shall be supported for both mobile terminated and mobile originated connections (MTC and MOC). (M)

2.1.2.2 It shall be possible for EuroRadio, on both trainborne and trackside originated connections, to influence at set-up the configuration of the bearer service type (i.e. information transfer capability, user rate) as well as to assign a priority level, if applicable. (M)

2.2. Signalling

2.2.1. I_{GSM}

2.2.1.1 For the mobile termination type MT2 the signalling over the I_{GSM} has to be in accordance with 3GPP 27.007. (M)

2.2.1.2. The MT2 maps the user signalling information from and to the GSM signalling information over Um which is according to: (M)

- GSM 04.04 (ETS 300 553): for layer 1 messages;
- GSM 04.05 (ETS 300 554) and 04.06 (ETS 300 555): for layer 2 messages;
- GSM 04.07 (ETS 300 556) and 04.08 (ETS 300 557): for layer 3 messages.

2.2.2. I_{FIX}

2.2.2.1 Signalling at I_{FIX} interface shall conform to: (M)

- ETS 300 011: for layer 1 messages;
- ETS 300 125: for layer 2 messages;
- ETS 300 102: for layer 3 messages.

2.3. Supplementary Services and Railway specific services

2.3.1 The following GSM and ISDN supplementary services shall be provided:

CLIP	Calling line identification presentation: Indicates the calling party number to the connected party	CLIP shall be provided by the GSM-R networks and mobiles, and might be used by the application
CoLP	Connected line identification presentation: Indicates the connected party number to the calling party	CoLP shall be provided by the GSM-R networks and mobiles, and might be used by the application
UUS1	User-to-user signalling: Transfers user information during connection set-up or release	UUS1 shall be provided by the GSM-R networks and mobiles, and might be used by the application: by default UUS1 is disabled
MLPP	Multilevel priority and pre-emption within ISDN: Used to set ERTMS connections to high priority	(M)
eMLPP	Enhanced Multilevel Precedence and Pre-emption within GSM-R: used to set ERTMS connections to high priority	(M)

2.3.2 The following railway specific service as specified in [2] shall be mandatory provided:

Location dependent addressing	Used to route the call to the most appropriate RBC	(M)

2.3.3 For the ISDN SS CLIP, the ETS 300 092-1 recommendation is applicable with the following exception: In Par. 9.2.1 "Normal operation", the partial calling number is not applicable. (M)

2.3.4 For the ISDN SS CoLP, the ETS 300 097-1 recommendation is applicable. (M)

2.3.5 For the ISDN SS UUS1, the ETS 300 286-1 recommendation is applicable. (M)

2.3.6 For the ISDN SS MLPP, the ITU-T Q.955 recommendation is applicable. (M)

2.4 Handling of Classmark 2 Information Element

2.4.1 VBS/VGCS will not be used for ETCS, hence the SIM-Card shall not contain subscription to VBS/VGCS services.(M)

2.4.2 In order to fulfil the EIRENE requirements for the handling of calls ("Call arbitration table" section 5.A of EIRENE SRS), GSM-R networks use "Inband Signalling for notification of incoming VGCS/VBS calls". (I)

2.4.3 This feature allow a user involved in a PTP voice / data call to receive incoming Group or Broadcast calls notification. (I)

2.4.4 The Inband Signalling for notification of incoming VGCS/VBS calls uses, at the Um interface, the FACCH logical channel which is physically created by replacing some frames of the TCH used for voice / data transmission. (I)

2.4.5 As a consequence, Inband signalling has an impact on the quality of the voice / data transmission. (I)

2.4.6 To minimize this negative impact, during the signalling phase of a call setup, the ETCS MT2 shall fill the "notification part" of the Mobile Station Classmark 2 Information Element specified by GSM 04.08, subclause 10.5.1.6, as it follows: (M)

- "no VGCS / VBS capability or no notifications wanted"

2.4.7 The Information Element is sent by the MT2 to the GSM-R network in the "CM Service Request", "Classmark Change" and "Paging Response" Messages. (I)

2.4.8 GSM-R networks shall handle this Information Element, namely to interrupt or not to interrupt, the voice / data transmission, (in case of incoming VGCS / VBS calls), depending on the MT2 Classmark 2 settings. (M)

3. I_{FIX} SPECIFICATION

3.0.1 This part of the specification applies to fixed equipment interfacing at I_{FIX}. This interface is the standard and recommended interface (I)

3.2. Data Transmission on the Interface

3.2.1 The ITU I.431 recommendation is applicable to layer 1. The user network interface at 2048 kbit/s is used. (M)

3.2.2 The ITU V.110 and ITU X.30 are applicable for data transfer. (M)

3.3. Signalling Transmission on the Interface

3.3.1 The specification is based on the following standards: (M)

- Layer 1: ETS 300 011
- Layer 2: ETS 300 125
- Layer 3: ETS 300 102-1 and EN 300 403-1 (modified ITU-T Q.931) This part of the Euroradio FFFIS specification is delta-specification to ETS 300 102-1. Corrections of this standard described in Annex ZA of EN 300 403-1 related to the described application ETCS will be taken into account. The conformance to the ETS 300 102-1 with the related corrections is considered to be sufficient; Conformance to EN 300 403-1 will be accepted too.

3.3.1. Originating Call Establishment

References within ETS 300 102-1:

Par. 5.1.1 Call request : (M)

Par. 5.1.2 B-channel selection - originating : (M)

Par. 5.1.3 Overlap sending mode : **not applicable**.

Par. 5.1.4 Invalid call information : (M)

Par. 5.1.5 Call proceeding : (M)

Par. 5.1.6 Notification of interworking at the originating interface : (M)

Par. 5.1.7 Call confirmation indication : (M)

Par. 5.1.8 Call connected : (M)

Par. 5.1.9 Call rejection : (M)

Par. 5.1.10 Transit network selection : **not applicable**

3.3.2. Terminating Call Establishment

References within ETS 300 102-1:

Par. 5.2.1 Incoming call : (M)

Par. 5.2.2 Compatibility checking : (M)

Par. 5.2.3.1 SETUP message delivered by point-to-point data link : (M)

Par. 5.2.3.2 SETUP message delivered by broadcast data link : **not applicable**

Par. 5.2.4 Overlap receiving : (M)

Par. 5.2.5 Call confirmation : (M)

Par. 5.2.6 Notification of interworking at the terminating interface : (M)

Par. 5.2.7 Call accept : (M)

Par. 5.2.8 Active indication : (M)

Par. 5.2.9 Non-selected user clearing : (M)

3.3.3. Call Clearing

References within ETS 300 102-1:

Par. 5.3.1 Terminology : (M)

Par. 5.3.2 Exception conditions : (M)

3.3.3.1. Clearing Initiated by the User

Par. 5.3.3 of ETS 300 102-1 (M).

3.3.3.2. Clearing Initiated by the Network

Par. 5.3.4 of ETS 300 102-1 (M).

3.3.3.3. Clear Collision

Par. 5.3.5 of ETS 300 102-1 (M).

3.3.4. Message Functional Definition and Contents

List of Used Messages

	REFERENCE PAR. of ETS 300 102-1
Call establishment messages: ALERTING CALL PROCEEDING CONNECT CONNECT ACKNOWLEDGE SETUP	 3.1.1 3.1.2 3.1.4 3.1.5 3.1.16 (see par. 3.3.4.2 below)
Call clearing messages: DISCONNECT RELEASE RELEASE COMPLETE	 3.1.6 3.1.11 3.1.12

3.3.4.1. Sequences of Messages

Key:

Forward message (from the calling to the called) ¾ ®
Backward message (from the called to the calling) ¬ ¾

- **Originating Call establishment**

The following is the sequence of messages:

Messages	Direction
Setup	⟶
Call Proceeding	⟵
Alerting	⟵
Connect	⟵
Connect Acknowledge	⟶

- **Terminating Call establishment**

The following is the sequence of messages:

Messages	Direction
Setup	⟵
Call Proceeding	⟶
Alerting	⟶
Connect	⟶
Connect Acknowledge	⟵

- **Clearing initiated by the calling user (same sequence at either end)**

The following is the sequence of messages:

Messages	Direction
Disconnect	⟶
Release	⟵
Release Complete	⟶

- **Clearing initiated by the called user (same sequence at either end)**

The following is the sequence of messages:

Messages	Direction
Disconnect	⟵
Release	⟶
Release Complete	⟵

3.3.4.2. Information Elements in the SETUP Message

Par. 3.16 and table 3-16 of ETS 300 102 -1 are mandatory. In addition, the Information Elements ‘Bearer capability’, and ‘Low layer capability‘ are defined below.

3.3.4.2.1 Bearer and Low layer capability information element

Bearer Capability: Par. 4.5.5 and table 4.6 of ETS 300 102-1 are applicable;
Low Layer Capability: Par 4.5.18 and table 4.18 of ETS 300 102-1 are applicable.
The coding of the fields must be as follows:

BC attribute	**Verbose value**	**Bit Value**
Information transfer capability	unrestricted digital information	54321 (octet 3) 01000
Coding standard	CCITT	76 (octet 3) 00
Extension Bit	No extension	8 (octet 3) 1
Information transfer rate	64 kbit/s	54321 (octet 4) 10000
transfer mode	Circuit mode	76 (octet 4) 00
Extension Bit	No extension	8 (octet 4) 1

Table 3.3.4.2.1: BC Information Element (Figure 4.11 and Table 4.6 ETS 300 102-1)

LLC attribute	**Verbose value**	**Numeric Value**
Information transfer capability	unrestricted digital information	54321 (octet 3) 01000
Coding standard	CCITT	76 (octet 3) 00
Extension Bit	No extension	8 (octet 3) 1
Information transfer rate	64 kbit/s	54321 (octet 4) 10000
Transfer mode	Circuit mode	76 (octet 4) 00
Extension Bit	No extension	8 (octet 4) 1 (*)

(*) The optional bytes 4a and 4b have been deleted according to EN 300 403-1 Annex ZA.1.2, 26

LLC attribute	Verbose value	Numeric Value
User information layer 1 protocol	V.110/X.30	54321 (octet 5) 00001
Layer identification	User info layer 1 protocol	76 (octet 5) 01
Extension bit	Octet is continued	8 (octet 5) 0
user rate[1]	Recommend. V.6 & X.1: 2.4 kbit/s 4.8 kbit/s 9.6 kbit/s	54321 (octet 5a) 00011 00101 01000
Negotiation	In-band negotiation not possible	6 (octet 5a) 0
Synchronous/asynchronous	Asynchronous	7 (octet 5a) 1
Extension Bit	Octet is continued	8 (octet 5a) 0
Spare		1 (octet 5b) 0
Flow control on Rx	Cannot accept data with flow control	2 (octet 5b) 0
Flow control on Tx	Not required to send data with flow control	3 (octet 5b) 0
Network independent clock on Rx	Cannot accept data with NIC	4 (octet 5b) 0
Network independent clock on Tx	Not required to send data with NIC	5 (octet 5b) 0
Intermediate rate	8 kbit/s 16 kbit/s	76 (octet 5b) 01 10
Extension Bit	Octet is continued	8 (octet 5b) 0
Parity information	none	321 (octet 5c) 011
Number of data bits	8 bits	54 (octet 5c) 11
Number of stop bits	1 bit	76 (octet 5c) 01
Extension Bit	Octet is (not) continued	8 (octet 5c) 0/1
duplex mode	full	7 (opt element: octet 5d) 1

Table 3.3.4.2.2: LLC Information Element (Figure 4.26 and Table 4.18 ETS 300 102-1)

[1] The user rate has to be set according to Quality of Service required from EuroRadio.

3.3.4.2.2 Called party number

Par. 4.5.8 of ETS 300 102-1 is applicable.

The purpose of the Called party number information element is to identify the called party of a call.

Type of number (octet 3)
7 6 5
0 0 0 unknown (Note 1)
0 0 1 international number (Note 2)
0 1 0 national number (Note 2)
0 1 1 network specific number (Note 3)
1 0 0 subscriber number (Note 2)
1 1 0 abbreviated number (Note 4)
1 1 1 reserved for extension

Note 1: The type of number “unknown” is used when the user or the network has no knowledge of the type of number, e.g. international number, national number, etc. In this case the number digits field is organized according to the network dialling plan; e.g. prefix or escape digits might be present.
Note 2: Prefix or escape digits shall not be included
Note 3: The type of number “network specific number” is used to indicate administration/service number specific to the serving network, e.g. used to access an operator.
Note 4: The support of this code is network dependent. The number provided in this information element presents a shorthand representation of the complete number in the specified numbering plan as supported by the network.

Numbering plan identification (octet 3)
4 3 2 1
0 0 0 0 Unknown (Note)
0 0 0 1 ISDN/Telephony numbering plan (CCITT Recommendation E.164/E.163)

Note: The type of number “unknown” is used when the user or the network has no knowledge of the numbering plan. In this case the number digits field is organized according to the network dialling plan; e.g. prefix or escape digits might be present.

3.3.4.2.3 Calling Party Number

Par. 4.5.10 of ETS 300 102-1 is applicable.

The purpose of the Calling number information element is to identify the origin of a call.

Type of number (octet 3)
7 6 5
0 0 1 international number
0 1 0 national number
Prefix or escape digits shall not be included

Numbering plan identification (octet 3)
4 3 2 1
0 0 0 0 Unknown (Note)
0 0 0 1 ISDN/Telepnony numbering plan (CCITT Rec. E.164/E.163)
Note: The type of number “unknown” is used when the user or the network has no knowledge of the numbering plan. In this case the number digits field is organized according to the network dialling plan; e.g. prefix or escape digits might be present.

Presentation indicator (octet 3a)
7 6
0 0 presentation allowed

Screening indicator (octet 3a)
2 1
1 1 network provided

3.3.4.2.4. Priority

According to ITU-T Q.955 Clause 3, par. 3.3.1.1 terminal equipment invoking MLPP supplementary service should be able to indicate the precedence level of the call in the SETUP message and should support Cause values: #8, “pre-emption” and #46, “precedence call blocked”.

Existing precedence levels are:

0 (FLASH OVERRIDE - highest)

1 (FLASH)

2 (IMMEDIATE)

3 (PRIORITY)

4 (ROUTINE - lowest)

Precedence level FLASH has to be selected for ETCS calls.

LFB Indication

The parameter has to be set to:

1 Look Forward Busy not allowed

3.3.4.2.5. User-User Information Element

Par. 4.5.29 of ETS 300 102-1 is applicable.

This information is not interpreted by the network, but rather is carried transparently and delivered to the remote user(s).

Protocol discriminator (octet 3)

8 7 6 5 4 3 2 1

0 0 0 0 0 0 0 0 User-specific protocol

The use of this information element is optional for the EURORADIO application.

4. I_{GSM} SPECIFICATION

4.0.1 This interface is the standard and recommended interface. (I)

4.1. Interface Architecture

4.1.1 3GPP 27.007 specifies a profile of AT commands that shall be used for controlling Mobile Equipment (ME) functions and GSM network services through a Terminal Adapter (TA). (M)

4.1.2 The I_{GSM} interface corresponds to the interface between the Terminal Equipment (TE) and the "ETCS" MT. (I)

4.1.3 The interface offers different operational modes for the transmission of signalling information or user data, dependent upon the interface's state: (I)

Command State: In the command state, the MT2 is not communicating with a remote station, and the MT2 is ready to accept commands.

Online Command State: In the online command state, the MT2 is communicating with a remote station, but treats signals from the TE as command lines and sends responses back to the TE. For EuroRadio application it is not desired to enter in the online command state, so the mechanism to switch from online data state to online command state defined within ITU V25ter section 6.2.9 or by some other, manufacturer-defined, means (e.g. escape sequence ″+++″) will be inhibited using ATS2=128 and AT&D2 settings defined in the following pgf.4.4.3.

Online Data State: In the online data state, the MT2 is communicating with a remote station. Signals from the TE are treated as data, which is transmitted to the remote station; conversely, data received from the remote station is sent to the TE. The online data state is entered from the command state after the reception of "Connect" message. Manufacturer-specific mechanism to enter the online command state shall not be used to guarantee interoperability. To avoid different behaviour, it is recommended to disable this escape sequence using the appropriate AT command usually referred as ATS2=128. This particular command shall be sent to the mobile terminal as part of its initialisation string. State control using physical circuits is mandatory.
"ETCS" MT is the name used to indicate a MT2 housed in the Cab Radio, connected to the TE via I_{GSM} interface.
In the following figure "ETCS" MT main constituencies parties are shown: the Electrical Adapter, if present, is in charge to adapt the mechanical and electrical MT2 interface in conformity to subclause 4.2.2 and 4.2.3 of this specification.

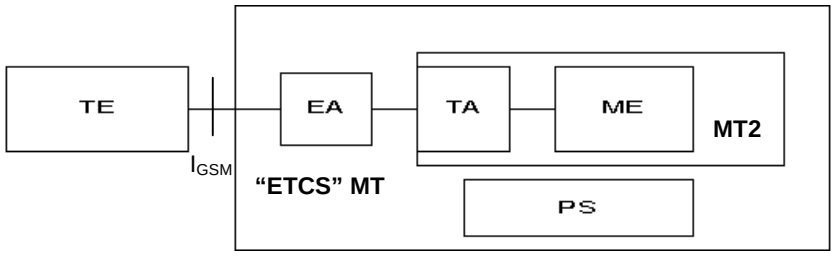

TE: Terminal Equipment
EA: Electrical Adapter:
TA: Terminal Adapter
ME: Mobile Equipment
PS: Power Supply

Figure 4.1 : Interface between Terminal Equipment and “ETCS” MT

4.2. Interface Definition

4.2.1. Functional Properties

4.2.1.1 I_{GSM} shall conform to ITU-T recommendation V.24. The signals required, according to GSM 07.02 / 07.03 (ETS 300 583 / ETS 300 584) are shown in the following table: (M)

Circuit Number	**Circuit Name**	**Async Services**	**Direction**
CT102	Common Return	Mandatory	
CT103	Transmitted Data	Mandatory	
CT104	Received Data	Mandatory	
CT105	Request to Send	Mandatory	TE --> MT2
CT106	Ready for Sending	Mandatory	MT2 --> TE
CT107	Data Set Ready	Optional (*)	MT2 --> TE
CT108/2	Data Terminal Ready	Mandatory	TE --> MT2
CT109	Data Channel Received Line Signal Detector	Mandatory	MT2 --> TE
CT125	Calling Indicator	Optional (*)	MT2 --> TE

Table 4.2.1: Signals required at I_{GSM} interface

(*) ETCS application shall be able to work without the options

4.2.2. Electrical Properties

4.2.2.1 The interface signal’s electrical characteristics shall conform to ITU-T recommendation V.28 or V.11. (M)

4.2.2.2 In order to resist electromagnetic disturbances within the railway environment, conformance of the interface signal’s electrical characteristics to ITU-T recommendation V.11 is recommended: according to V.11, every signal at the I_{GSM} interface will have to be balanced. (O)

4.2.3. Mechanical Properties

4.2.3.1 The I_{GSM} interface shall conform to ISO 2110 amendement-1, if the related signal is defined as balanced in this recommendation. This international standard specifies a female 25-pole D-type connector on the mobile (“ETCS” MT) side. (O)

4.2.3.2 It is recommended that the pin lay-out will be compliant to Tab 4.2.3. (O)

Pin	V.11 / RS-422	V.28/RS-232	Circuit Number	Circuit (V.24)	
1	P-GND	P-GND		Protective Ground	M
2	Tx	Tx	103-A	Transmitted Data	M
3	Rx	Rx	104-A	Received Data	M
4	RTS	RTS	105-A	Request to Send	M
5	CTS	CTS	106-A	Ready for sending	M
6	DSR	DSR	107-A	Data Set Ready	O
7	GND (O)	GND	102-A	Signal Ground	M
8	DCD	DCD	109-A	Data Carrier Detect	M
9					
10	DCD	n.c.	109-B	Data Carrier Detect	M
11	DSR	n.c.	107-B	Data Set Ready	O
12					
13	CTS	n.c.	106-B	Ready for sending	M
14	Tx	n.c.	103-B	Transmitted Data	M
15					
16	Rx	n.c.	104-B	Received Data	M
17					
18	DTR	n.c.	108/2-B	Data Terminal Ready	M
19	RTS	n.c.	105-B	Request to Send	M
20	DTR	DTR	108/2-A	Data Terminal Ready	M
21					
22	RI	RI	125-A	Ring Indicator	O
23				Protocol Switch V.28/V.11: pin 23 not connected:V.28 pin 23 connected to GND:V.11	O
24					
25	RI	n.c.	125-B	Ring Indicator	O

Table 4.2.3: Pin layout of 25 pin connector

4.3. Data Transmission on the Interface

4.3.0.1 This interface provides the transmission of transparent, full duplex, user data. (I)

4.3.1. Used Circuits

4.3.1.1 **Protective Ground** – As specified in ITU-T V24 sect. 3.1, within the DTE, this circuit should be brought to one point, and it should be possible to connect this point to protective ground or earth by means of a metallic strap within the equipment. This metallic strap can be connected or removed at installation, as may be required to

meet applicable safety regulations or to minimize the introduction of noise into electronic circuitry. Caution should be exercised to prevent the establishment of ground loops carrying high currents. (I)

4.3.1.2 **Common Return (CT102) -** This circuit is used by V.28 for the proper recognition of signals on other circuits. (I)

4.3.1.3 **Transmitted Data (CT 103) -** Whilst in the online data state, data signals are processed by the MT2 and transmitted to the distant end. (I)

4.3.1.4 **Received Data (CT 104) -** Whilst in the online data state, the data received from the distant end is sent to TE on this circuit. (I)

4.3.2. Data Format for Asynchronous Operation

4.3.2.1 During the online data state, data transmitted between the TE and MT2 shall conform to the requirements for start-stop data transmission. The format of the used characters is defined by a data-parity-stop parameter set. This defines the number of data bits, the parity element and the minimum number of stop bits used between successive characters. The data-parity-stop configuration and data rate correspond to the bearer capability information element used in the (mobile originated or mobile terminated) call set-up procedure. The 8N1 combination (8 data bits, no parity, 1 stop bit) is required by EuroRadio. These values have to be the default settings by configuration. (M)

4.4. Signalling Transmission on the Interface

4.4.1 3GPP 27.007 is applicable. Mapping of the 3GPP 27.007 procedures to PLMN Dm-channel signalling is done by exchange of signalling information over the I_{GSM} interface.

4.4.1. Physical Layer

4.4.1.1. Used Circuits

4.4.1.1.1 **Protective Ground** – As specified in ITU-T V24 sect. 3.1, within the DTE, this circuit should be brought to one point, and it should be possible to connect this point to protective ground or earth by means of a metallic strap within the equipment. This metallic strap can be connected or removed at installation, as may be required to meet applicable safety regulations or to minimize the introduction of noise into electronic circuitry. Caution should be exercised to prevent the establishment of ground loops carrying high currents. (I)

4.4.1.1.2 **Common Return (CT102) -** This circuit is used by V.28 for the proper recognition of signals on other circuits. (I)

4.4.1.1.3 **Transmitted Data (CT 103) -** Direction: to DCE - Whilst in the command state or online command state, data signals are processed by the MT2 and are not transmitted to the remote station. (I)

4.4.1.1.4 **Received Data (CT 104)** - Direction: from DCE - Whilst in the command state or on-line command state, the MT2 generates the responses on this circuit. (I)

4.4.1.1.5 **Request to Send (CT105)** - Direction: to DCE - Signals on this circuit control the data channel transmit function of the DCE. The ON condition causes the DCE to assume the data channel transmit mode. The OFF condition causes the DCE to assume the data channel non-transmit mode, when all data transferred on circuit 103 have been transmitted. (I)

4.4.1.1.6 **Ready for sending (CT106)** - Direction: from DCE - Signals on this circuit indicate whether the DCE is prepared to accept data signals (data transfer and commands) for transmission on the data channel or for maintenance test purposes under control of the DTE. The ON condition indicates that the DCE is prepared to accept data signals from the DTE. The OFF condition indicates that the DCE is not prepared to accept data signals from the DTE. (I)

4.4.1.1.7 **Data set ready (CT107)** - Direction: from DCE - Signals on this circuit indicate whether the DCE is ready to operate. The ON condition indicates that the DCE is ready to exchange control signals with the DTE to initiate transfer of data. The OFF condition, in conjunction with the OFF condition on circuit 106, indicates that the DCE is not ready to operate in the data transfer phase. (I)

4.4.1.1.8 **Data Terminal Ready (CT 108/2)** - Direction: to DCE - Signals on this circuit indicate the status of the DTE. The MT2 may monitor changes in the state of this circuit and operate according the currently valid configuration (e.g. upon detecting an on-to-off transition, the MT2 enters the online command state or, the MT2 performs an orderly cleardown of the call). (I)

4.4.1.1.9 **Received Line Signal Detector (CT 109)** - Direction: from DCE - Signals on this circuit indicate the detection of received line signal from the distant end. The TE may intercept this signal, so that the issue of result codes can be properly co-ordinated with the transitions in this signal. (I) (only valid for data calls)

4.4.1.1.10 **Calling Indicator (CT 125)** - Direction: from DCE - If provided by the MT2, the TE may intercept this signal, so that it can detect network alerting. (I)

4.4.1.1.11 GSM 04.21 refers to the frame structure and it identifies the use of status bits for the conveyance of signalling information. These status bits are used to convey the channel control information associated with the data bits which pass (in either direction) across the terminal adaptation interface during the online data or online command states. The status bit information is filtered and mapped onto the control circuit lines.(I)

4.4.1.2. Character Framing: formats for Asynchronous Operation

During the command state and online command state, data transmitted between the TE and MT2 shall conform to the requirements for start-stop data transmission as specified in ITU-T recommendation V.4 and ISO 1177. The format of the characters used is defined by a data-parity-stop parameter set. This defines the number of data bits, the parity element and the minimum number of stop bits used between successive characters. The 8N1 combination (8

data bits, no parity, 1 stop bit) is required by EuroRadio. These values have to be the default settings at power on or by auto-detection. (M)

4.4.2. AT Command Syntax and Procedures

Following AT Command Syntax and procedures conform to ITU-T V25ter with the restrictions defined in this specification . (M)

4.4.2.1. Alphabet

Refer to ITU-T V25ter section 5.1 (M)

4.4.2.2. Command Lines

Refer to ITU-T V25ter section 5.2 (M)

4.4.2.3. Basic Syntax Commands

Refer to ITU-T V25ter section 5.3 (M)

4.4.2.4. Extended Syntax Commands

Refer to ITU-T V25ter section 5.4 (M)

4.4.2.5. Issuing Commands

Refer to ITU-T V25ter section 5.5 (M)

4.4.2.6. Executing Commands

Refer to ITU-T V25ter section 5.6 (M)

4.4.2.7. MT2 Responses

Refer to ITU-T V25ter section 5.7 with the exception of DIALTONE and NO ANSWER result codes which are not applicable. (M)

4.4.3. TE-TA interface commands

4.4.3.1 Table 4.4.3 summarizes commands relating to TA-TE interface operation, and a subset of MT2 factory settings:

Command	Ref. in V.25 ter	Description	3GPP/V25ter recommended default value	ETCS default value (M)
S2=[<value>]	3.2	Escape code character used to switch from Online Data state to Online Command state		S2=128 *Escape sequence is disabled*
S3=[<value>]	6.2.1	Command line termination character	S3=13	S3=13 [1] *Carriage return*
S4=[<value>]	6.2.2	Response formatting character	S4=10	S4=10 *Line feed*[1]
E[<value>]	6.2.4	Command echo	E1	E1 *Echo enabled*
Q[<value>]	6.2.5	Result code suppression	Q0	Q0 *TA transmit result codes*
V[<value>]	6.2.6	TA response format	V1	V1 *DCE transmits full headers and trailers and verbose response text*
X[<value>]	6.2.7	Defines CONNECT result code format and dial tone and busy detection		X3 *CONNECT is shown with speed; recognition of dialling tone is disabled and busy detection is enabled*
&C	6.2.8	Behaviour of circuit 109 DCD. &C0: DCD always on &C1 : DCD changes in accordance to the detection of received line signal from the distant end.	&C1	&C1 *Circuit 109 changes physical layer functions in accordance with the underlying DCE*

[1] If the command is not supported, MT has to have the predefined factory setting of S3 and S4 according to the ETCS default value specified in the table above. (M)

&D	6.2.9	Behaviour of circuit 108/2 DTR		&D2 *Upon an on-to-off transition of circuit 108/2, the DTE instructs the underlying DCE to perform an orderly cleardown of the call*
Command	**Ref. in V.25 ter**	**Description**	**3GPP/V25ter recommended default value**	**ETCS default value (M)**
+IPR=<rate>	6.2.10	specifies the data rate at which the DCE will accept commands, in addition to 9.600 bit/s	+IPR=0 automatic rate detection	+IPR=9600 (1)
+ICF= [<format> [,<parity>]][1]	6.2.11	DTE-DCE character framing	+ICF=3,3	+ICF=3,3 *Sets 8 databit, no parity, 1 stop bit*
+IFC= [<by_te> [,<by_ta>]] or &K<value>	6.2.12 or Rockwell modem manual	select DTE-DCE flow control mechanism	+IFC=2,2	+IFC=2,2 or &K3 *Hardware (based on RTS and CTS) flow control mechanism enabled*

Table 4.4.3: TE-TA interface commands

(1): Valid for Mobile Originated Calls: under investigation for MTC

4.4.4. Result Codes

4.4.4.1 The following table shows the most important result codes used over the I_{GSM} interface, in the call control procedures and during the ME status change: (I)

Result Code	**Description**
OK	acknowledges the execution of a command
CONNECT <datarate>	the connection has been established; the MT2 is moving from command state to online data state
+COLP: <number>,<type>	connected line identification presentation
RING +CRING: ASYNC [,<priority>[,<subaddr>,<satype>]]	the MT2 has detected an incoming call signal from the network
+CLIP: <number>,<type> [,<subaddr>,<satype>]	calling line identification presentation
NO CARRIER	The connection has been terminated

[1] If the above command is not supported, MT has to automatically configure "8N1" character framing at the power on. (M)

	The call setup failed before the alerting phase
ERROR +CME ERROR: <err>	The command was not accepted
BUSY	The called party is busy: a busy signal has been detected
NO ANSWER	The called party did not answer the call: the connection completion has time-out
+ CREG: <stat>	Change in the ME network registration status

Table 4.4.4: Summary of result codes in the call control procedures and during the ME status change

4.4.5. Originating Call Establishment

4.4.5.1. Select Bearer Service Type

4.4.5.1.1 The MT2 shall be capable of selecting the GSM-R bearer services used by ETCS application in conformity to 3GPP 27.007 subclause 6.7. (M)

4.4.5.1.2 Set command selects the bearer service <name> with data rate <speed> and the connection element for mobile originated calls. (I)

Command	Possible Responses
+CBST=[<speed>[,<name>[,<ce>]]]	OK or ERROR
+CBST?	+CBST: [<speed>[,<name>[,<ce>]]]
+CBST=?	+CBST: (list of supported values)

4.4.5.1.3 For EuroRadio, the provision of the following values is required: (M)

<speed>:	
68	2400 bps (V.110)
70	4800 bps (V.110)
71	9600 bps (V.110)

<name>:	
0	asynchronous modem

<ce>:	
0	Transparent

4.4.5.2. Dial Command

4.4.5.2.1 3GPP 27.007 subclause 6.2 and ITU V25ter section 6.3.1 are applicable. (M)

4.4.5.2.2 The Dial command (ATD) instructs the MT2 to originate a call.

Command	Possible Responses
D [<dial_string>]	CONNECT <datarate>

	NO CARRIER ERROR BUSY OK

4.4.5.2.3 The result code OK will be issued, when the TE aborts a command. The <datarate> specifies the speed of the data connection. Permitted values for <datarate> are:

<datarate>:
2400
4800
9600

4.4.5.3. Select Priority Level

4.4.5.3.1 The priority of a MOC is selected using a Service Code to be put in front of the number to be called, in conformity to GSM 02.30, Annex B: (M)

AtD*<SC>#<Number>

4.4.5.3.2 Using this command, the priority required for this call is transferred to the GSM-R network by the MT2. (I)

4.4.5.3.3 Use of the extension *<SC># is mandatory. (M)

4.4.5.3.4 When the priority selection is not used, the default priority setting for this subscriber in the network HLR is applied. (I)

4.4.5.3.5 The possible responses correspond to the responses of the dial command (see section 4.5.1); the extended error codes +CME ERROR: <err> are also supported if the MT2 is configured accordingly (see V.25 ter Section 9). (I)

Defined values:

<SC>:	**Priority level:**
75	No priority
750	Priority 0
751	Priority 1
752	Priority 2
753	Priority 3
754	Priority 4

4.4.5.3.6 For ETCS only priority 1 is used. For other ERTMS non safety related applications priority 3 is used. (M)

4.4.5.4. Connected Line Identification Presentation

4.4.5.4.1 3GPP 27.007 subclause 7.8 is applicable. (M)

4.4.5.4.2 This command enables or disables the presentation of the connected line identity at the TE. When enabled, the connected line identity is provided as an intermediate

result code, before any result code is provided to a mobile originated call set-up command. (I)

Command	Possible Responses
+COLP=[<n>]	OK or +CME ERROR: <err>
+COLP?	+COLP: <n>,<m>
+COLP=?	+COLP: (list of supported <n>s)

Defined values:

<n>	(the parameter set/shows the result code presentation status in MT2)
0	Disable
1	Enable

<m>	(the parameter shows the subscriber COLP service status in the network)
0	COLP not provisioned
1	COLP provisioned
2	unknown (e.g. network currently not available)

4.4.5.4.3 Default value: +COLP = 0 (O)

4.4.6. Terminating Call Establishment

4.4.6.1 The parameters: radio channel requirement, connection element, number of data bits, parity and number of stop bits which provided in the GSM set-up message, are negotiation parameters. The call can be accepted or rejected during the call set-up phase, by applying the negotiation procedure in accordance with GSM 07.01 (ETS 300 582). (M)

4.4.6.1. Automatic answer

4.4.6.1.1 ITU-T V25.ter section 6.3.8 is applicable. (M)

4.4.6.1.2 This S-parameter controls the automatic answering feature of the DCE. If set to 0, automatic answering is disabled. If set to a non-zero value, the DCE shall cause the DCE to answer when the incoming call indication (ring) has occurred the number of times indicated by the value. (I)

4.4.6.1.3 Default value: S0 = 1, the DCE answers after the first ring. (O)

4.4.6.2. Calling Line Identification Presentation

4.4.6.2.1 3GPP 27.007 subclause 7.6 is applicable. (M)

4.4.6.2.2 This command enables or disables the presentation of the calling line identity at the TE. When enabled, the calling line identity is provided after every RING or +CRING result code sent from MT2 to the TE. (I)

Command	Possible Responses
+CLIP=[<n>]	OK or +CME ERROR: <err>
+CLIP?	+CLIP: <n>,<m>
+CLIP=?	+CLIP: (list of supported <n>s)

Defined values:

<n>	(the parameter set/shows the result code presentation status in MT2)
0	Disable
1	Enable

<m>	(the parameter shows the subscriber CLIP service status in the network)
0	CLIP not provisioned
1	CLIP provisioned
2	unknown (e.g. network currently not available)

4.4.6.2.3 Default value: +CLIP = 0 (O)

4.4.6.3. Incoming Call Priority Presentation

4.4.6.3.1 3GPP 27.007 subclause 6.11 and ITU V25ter section 6.3.4 are applicable with the restrictions defined in this section. (M)

4.4.6.3.2 The incoming call priority level is presented at the TE if the extended format of an incoming calls is enabled (At+CRC=1). In such a case the incoming call is presented in the following format: (I)

+CRING: <type>

<type>: ASYNC [,<priority> [,<subaddr>,<satype>]]

where the allowed values for <priority> are:

<priority>	
75	No priority
750	Priority 0
751	Priority 1
752	Priority 2
753	Priority 3
754	Priority 4

4.4.6.3.3 For ETCS only priority 1 is used. For other ERTMS non safety related applications priority 3 is used. (M)

4.4.6.4. Cellular result codes

4.4.6.4.1 In case of mobile terminated asynchronous transparent data calls, 3GPP 27.007 (pr ETS 300 642) subclause 6.11 is applicable . (M)

4.4.6.4.2 Set command controls whether or not extended format of incoming call indication is used. (I)

Command	Possible Responses
+CRC=[<mode>]	OK or +CME ERROR: <err>
+CRC?	+CRC: <mode>
+CRC=?	+CRC: (list of supported <mode>s)

Defined values:

<n>	
0	disables extended format
1	Enables extended format

4.4.6.4.3 Default value: +CRC = 0 (O)

4.4.6.5 Answer

4.4.6.5.1 ITU V25ter section 6.3.5 is applicable. (M)

4.4.6.5.2 An incoming call, flagged by a RING or +CRING result code, can be answered using the AT Answer (ATA) command. Automatic answering can be configured by setting the register S0 to a non-zero decimal value, by using the AT command, ATS0=n. For non-zero values of n, the MT2 will answer the call after n incoming call indications. (I)

Command	Possible Responses
A	CONNECT <datarate> ERROR NO CARRIER OK

The result code OK will be issued, when the TE aborts a command. The <datarate> specifies the speed of the data connection. Permitted values for <datarate> are:

<datarate>:
2400
4800
9600

4.4.7. Call Clearing

4.4.7.1 ITU V25ter section 6.3.6 is applicable. (M)

4.4.7.2 The Hook Control (ATH) command instructs the MT2 to clear the call. (I)

Command	Possible Responses
H[<0>]	OK

4.4.8. ITU V.25ter DTE-DCE interface commands

4.4.8.1. Command echo

4.4.8.1.1. ITU V25ter section 6.2.4 is applicable. (M)

4.4.8.1.2 The setting of this parameter determines whether or not the DCE echoes characters received from the DTE. (I)

Command	Possible Responses
E[<value>]	OK or ERROR

Defined values

0 DCE does not echo characters
1 DCE echoes characters

4.4.8.1.3 Default value: E1

4.4.9. ITU V.25ter Generic DCE control commands

4.4.9.1. Reset to user default configuration

4.4.9.1.1 ITU V25ter section 6.1.1 is applicable.(M)

4.4.9.1.2 This command instructs the DCE to set all parameters to their defaults as specified by the user, e.g. in the Non Volatile RAM as user profile. (I)

Command	Possible Responses
Z[<value>]	OK or ERROR

Interpretation of <**value**> is optional and manufacturer-specific. For the use of this command see the remark in the paragraph below.

4.4.9.2. Set to factory-defined configuration

4.4.9.2.1 ITU V25ter section 6.1.2 is applicable.(M)

4.4.9.2.2 This command instructs the DCE to set all parameters to default values specified by the manufacturer.(I)

Command	Possible Responses
&F[<value>]	OK or ERROR

Defined values:

0 Set parameters to factory defaults.
(other) Reserved for manufacturer proprietary use.

4.4.9.2.3 **Remark:** The MT settings used by ETCS application are listed in table 4.4.3 and 4.4.13 of this document. These settings are configured before use in the user profile "0". At the power on, the MT2 starts automatically with the configuration saved in profile "0". Whenever the user wants to recall the default configuration, it has to use the "AtZ" command (or "AtZ0", depending from the implementation). (M)

4.4.10. Network service related commands

4.4.10.1. Subscriber number +CNUM

4.4.10.1.1 3GPP 27.007 subclause 7.1 is applicable. (M)

4.4.10.1.2 Action command returns the subscriber MSISDN stored in the EF_{MSISDN} in the SIM Card. (I)

4.4.10.2. Network registration +CREG

4.4.10.2.1 3GPP 27.007 subclause 7.2 is applicable. (M)

4.4.10.2.2 This command enables the presentation of an unsolicited result code +CREG: <stat> when <n>=1 and there is a change in the ME network registration status. (I)

Command	Possible Responses
+CREG[<n>]	
+CREG?	+CREG : <n>, <stat>[,<lac>,<ci>] +CME ERROR: <err>
+CREG=?	+CREG : list of supported <n>s

Defined values:
<n>:
0: disable network registration unsolicited result code
1: enable network registration unsolicited result code +CREG: <stat>

2: enable network registration and location information unsolicited result code +CREG: <stat>[,<lac>,<ci>]

<stat>:
0 not registered, ME is not currently searching a new operator to register to
1 registered, home network
2 not registered, but ME is currently searching a new operator to register to
3 registration denied
4 unknown
5 registered, roaming
<lac>: string type; two byte location area code in hexadecimal format
<ci>: string type; two byte cell ID in hexadecimal format

4.4.10.2.2.3 Default values: <n>= 1: in the case that the ME deregisters from the GSM-R network, an unsolicited +CREG : <stat> response is sent to the TE. (M)

4.4.10.3. Operator selection +COPS

4.4.10.3.1 3GPP 27.007 subclause 7.3 is applicable with the restrictions concerning the modes defined in this specification. (M)

4.4.10.3.2 Set command forces an attempt to select and register the GSM-R network operator: (I)
<mode> is used to select whether the selection is done automatically by the ME or is forced by this command to operator <oper> (it shall be given in format <format>). In manual mode, if the selected operator is not available, no other operator shall be selected (except <mode>=4). <mode>=2 forces an attempt to deregister from the network. The selected mode affects to all further network registration (e.g. after <mode>=2, ME shall be unregistered until <mode>=0 or 1 is selected).

4.4.10.3.3 The MT2 shall select the last mode used, as the default mode, at every switch-on, as specified in 3GPP TS02.11 subclause 3.2. (M)

Command	Possible Responses
+COPS=[<mode>[,<format> [,<oper>]]]	+CME ERROR: <err>
+COPS?	+COPS: <mode>[,<format>,<oper>] +CME ERROR: <err>
+COPS=?	+COPS: [list of supported (<stat>,long alphanumeric <oper> ,short alphanumeric <oper>,numeric <oper>)s] [,,(list of supported <mode>s),(list of supported <format>s)] +CME ERROR: <err>

Defined values:

<mode>:
0 automatic (<oper> field is ignored)
1 manual (<oper> field shall be present)
2 deregister from network (*)
3 set only <format> (for read command +COPS?), do not attempt registration/deregistration (<oper> field is ignored); this value is not applicable in read command response
4 manual/automatic (<oper> field shall be present); if manual selection fails, automatic mode (<mode>=0) is entered

<format>:
0 long format alphanumeric <oper>
1 short format alphanumeric <oper>
2 numeric <oper>

<oper>: string type: see 3GPP 27.007 subclause 7.3 for details.[1]

<stat>:
0 unknown
1 available
2 current
3 forbidden

(*) ETCS application shall be able to work without <mode> 2: deregister from the network

4.4.10.3.4 Manual (1) and Automatic modes have to be supported by MT. (M)

4.4.10.3.5 Default values : (M)

<mode>: 1 manual
<format>: 2 numeric

[1] GSM-R Network Codes will be collected by UIC|.

4.4.11. Mobile Equipment control and status commands

4.4.11.1. Phone activity status +CPAS

4.4.11.1.1 3GPP 27.007 subclause 8.1 is applicable with the restrictions defined in this specification. (M)

4.4.11.1.2 Execution command returns the activity status <pas> of the ME. It can be used to interrogate the ME before requesting action from the phone. Refer 3GPP 27.007 subclause 9.2 for possible <err> values. (I)

Command	Possible Responses
+CPAS	+CPAS: <pas> +CME ERROR: <err>
+CPAS=?	+CPAS: [list of supported <pas>s] +CME ERROR: <err>

Defined values:
<pas>:
0 ready (ME allows commands from TA/TE) (M)
1 unavailable (ME does not allow commands from TA/TE) (O)
2 unknown (ME is not guaranteed to respond to instructions) (O)
3 ringing (ME is ready for commands from TA/TE, but the ringer is active) (O)
4 call in progress (ME is ready for commands from TA/TE, but a call is in progress) (O)
5 asleep (ME is unable to process commands from TA/TE because it is in a low functionality state) (O)

4.4.11.2. Signal quality +CSQ

4.4.11.2.1 3GPP 27.007 subclause 8.5 is applicable. (M)

4.4.12. Mobile Equipment errors

4.4.12.1. Mobile Equipment errors +CMEE

4.4.12.1.1 3GPP 27.007 subclause 9.1 is applicable. (M)

4.4.13 Call control commands and DCE control commands

4.4.13.1 The following table summarises a subset of call and DCE control commands and settings to be stored on the MT2 ETCS default configuration. Any additional commands used will have to comply with 3GPP 27.007 (M).

Command	ITU V25ter sect.	3GPP 27.007 subcl.	Description	Default ETCS value
D <dial_string>	6.3.1	6.2	originates a call	
A	6.3.5		answers a call	
H[<0>]	6.3.6		hangs-up a call	
S0=[<value>]	6.3.8		sets the number of call indications (rings) required before the call is automatically answered	S0=1 [1] *ME answers after the first ring*
+CBST=[<speed> [, <name> [,<ce>]]]		6.7	Selects the bearer service type for mobile originated calls	+CBST=<speed>, 0, 0
+CLIP=[<n>]		7.6	enables or disables the presentation of the calling line's identity	+CLIP=0 *Clip disabled*
+COLP=[<n>]		7.8	enables or disables the presentation of the connected line's identity	+COLP=0 *Colp disabled*
Z[<value>]	6.1.1		reset to default configuration	
&F[<value>]	6.1.2		set to factory-defined configuration	
+CRC=<mode>		6.11	cellular result codes	+CRC=0 *Disabled extended format cellurar result codes*
+CNUM		7.1	returns the MSISDNs related to the subscriber	
+CREG		7.2	returns the network registration status	+CREG=1 *Enables the network registration status*
+COPS[<mode>[, <format> [,<oper>]]]		7.3	operator selection	+COPS= =1,2,"<oper>"
+CPAS		8.1	returns activity status of MT2	
+CSQ		8.5	returns received signal strength indication and channel bit error rate	
+CMEE		9.1	enables the use of result code +CME ERROR: <err> as an indication of a ME functionality error	+CMEE=1 *Presentation of result code enabled*

Table 4.4.13: Call control commands and DCE control commands

[1] V25 ter recommended default setting for ATS0 is 0: automatic answer disabled (V25 par 6.3.8).

4.5. MT2 Start-up procedure & reset

The manufacturer of the GSM-R terminal should configure the default settings of the equipment according to the following expected start-up behaviour:

4.5.1 The radio (MT2) starts automatically when the power is switched on. (M)

4.5.2 The radio (MT2) will configure itself to the user stored profile at position “0” (ATZ0) as described in 4.4.9.2.3. (M)

4.5.3 The reset of the radio (MT2) is done by the following procedure (TBD)

5. MESSAGE FLOWS

5.1. Calls Originated from Trackside to Trainside

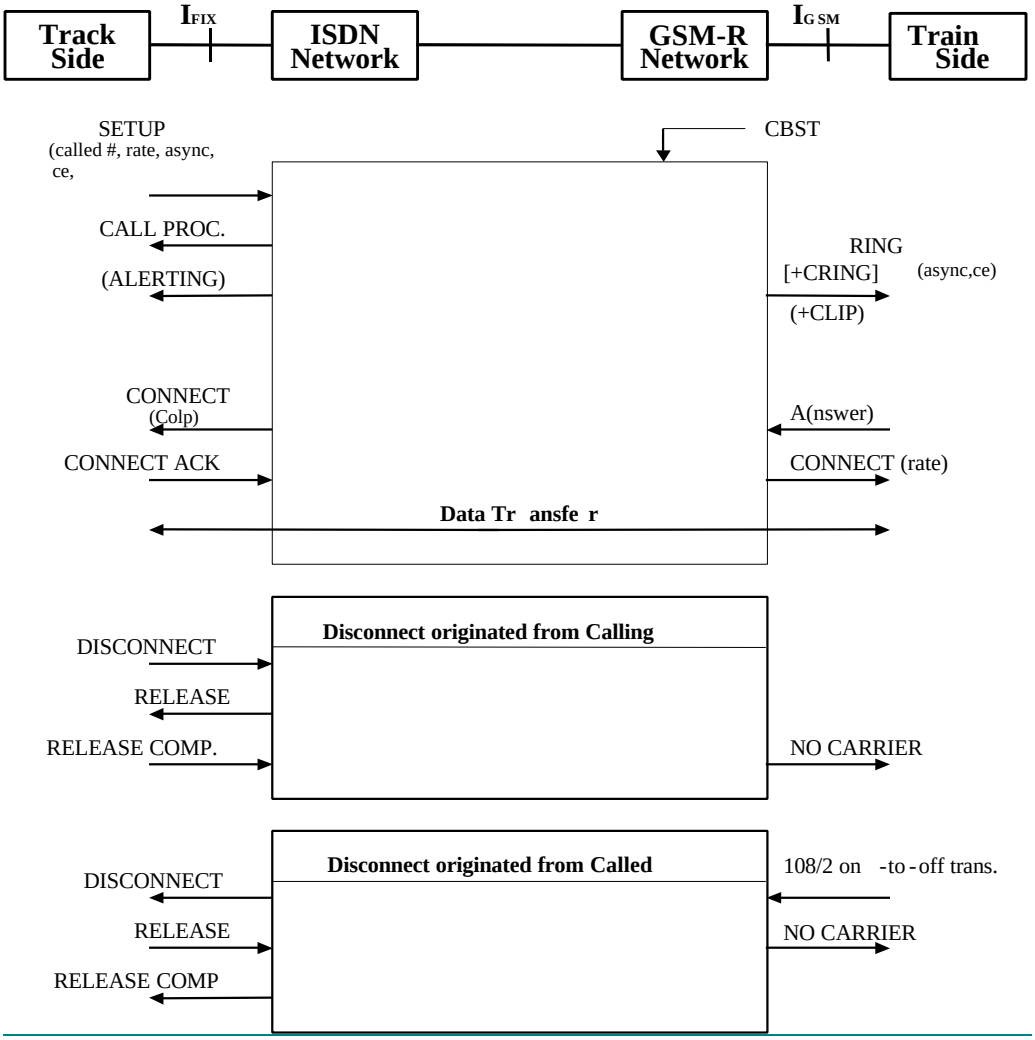

Figure 5.1 : MTC message flow

5.2 Calls Originated from Trainside to Trackside

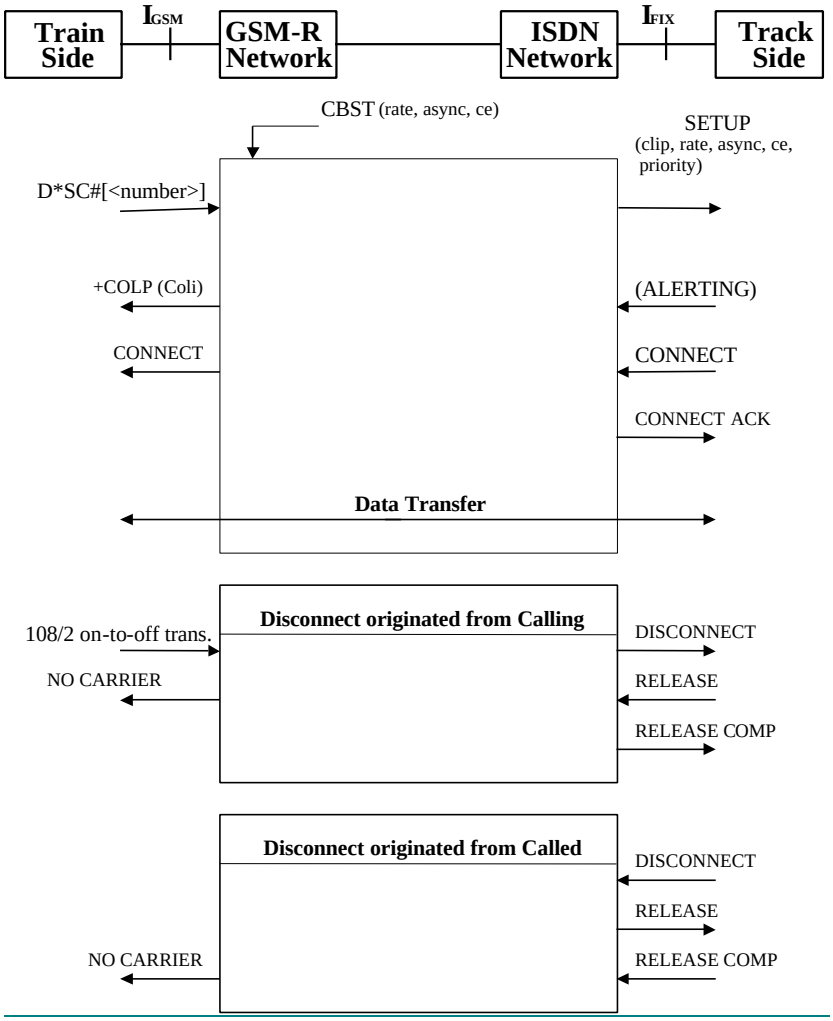

Figure 5.2.1 : MOC message flow

5.2.1 Example: V.110 signaling during a MOC

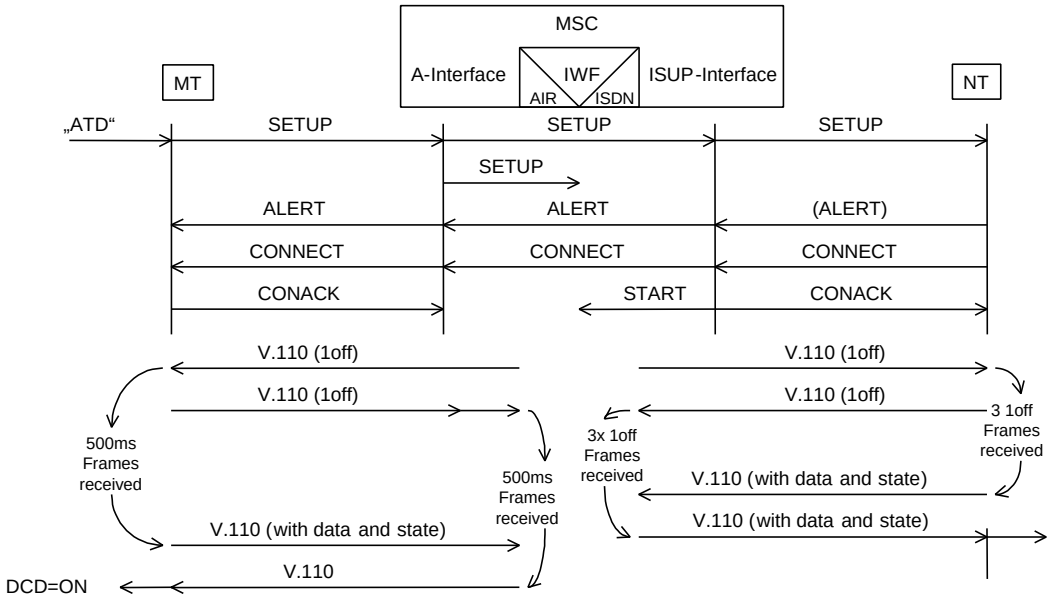

Figure 5.2.2 : V.110 Signalling flow during MOC

6. NUMBERING AND ADDRESSING

6.1 The numbering plan to be used to address mobile and fixed subscribers of the railway networks is specified in chapter 9 EIRENE SRS [3]. (I)

6.2 ERTMS calls may be both Mobile Originated and Mobile Terminated. (I)

6.3 In the case of Mobile Originated Calls, the EuroRadio application has to provide the called party number of the RBC to be called. (M)

6.4 The network will perform no special action to handle this kind of call. The number format used to address RBCs connected to the GSM-R network will be (00+CC+NDC+SN). The SN number length shall not exceed 8 digits. (M)

6.5 The standardized “1500” Short Code can be dedicated to address the call to the appropriate RBC. (I)

6.6 In the case of Mobile Terminated Calls, the ERTMS/ETCS application shall be called by using the MSISDN of the mobile. (M)

ANNEX A: SYSTEM ARCHITECTURE

A.0.1 This part of the specification is for information only.

A.1. Overall Architecture

A.1.1 As depicted in Figure A-1, the communication flow between different EuroRadio units (typically) passes through several networks, namely mobile (GSM-R) networks as well as ISDN transport network. Each network has its own internal structure and connection control protocol. EuroRadio will only see the network interfaces at the user side (I_{GSM} or I_{FIX}). The interfaces between networks will be controlled by adaptation or interworking functions.

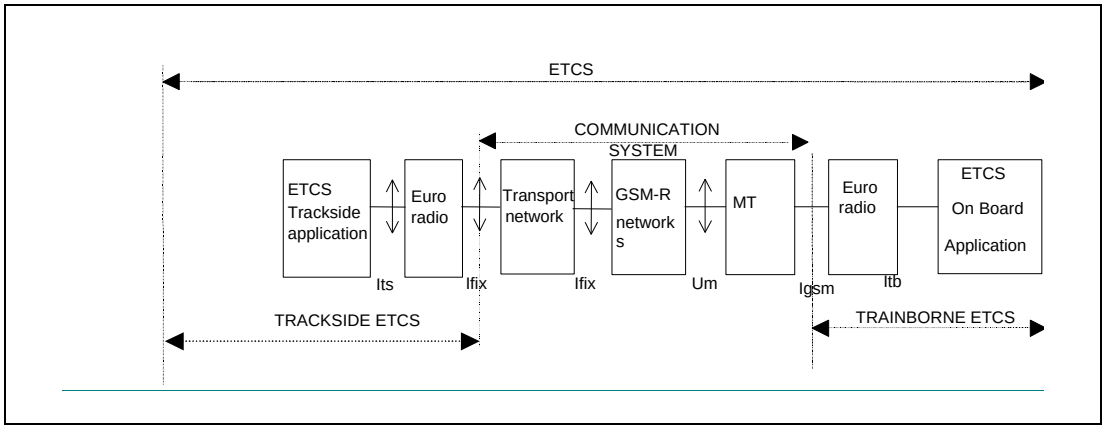

Figure A-1: ERTMS/ETCS reference architecture[1]

A.2. GSM-R Network

A.2.0 As shown in Figure A-2, a GSM Public Land Mobile Network (PLMN) consists of the following subsystems:

The Base Station Subsystem (BSS), comprising one or more Base Station Controllers (BSCs), each connected to one or more Base Transceiver Stations (BTSs);

The Network Sub-System (NSS), containing the Mobile Switching Centre (MSC) connected to: the Home Location Register (HLR) and Authentication Centre (AuC), the Visitor
Location Register (VLR) and (optionally) the Equipment Identification Register (EIR);

The Operation and Maintenance Sub-System (OMSS).In Figure A-2, the connections which carry traffic data are indicated by bold lines (▬) whilst those connections carrying only signalling data are indicated by thin lines (——).

[1] Derived from UNISIG SRS section 2.5.3

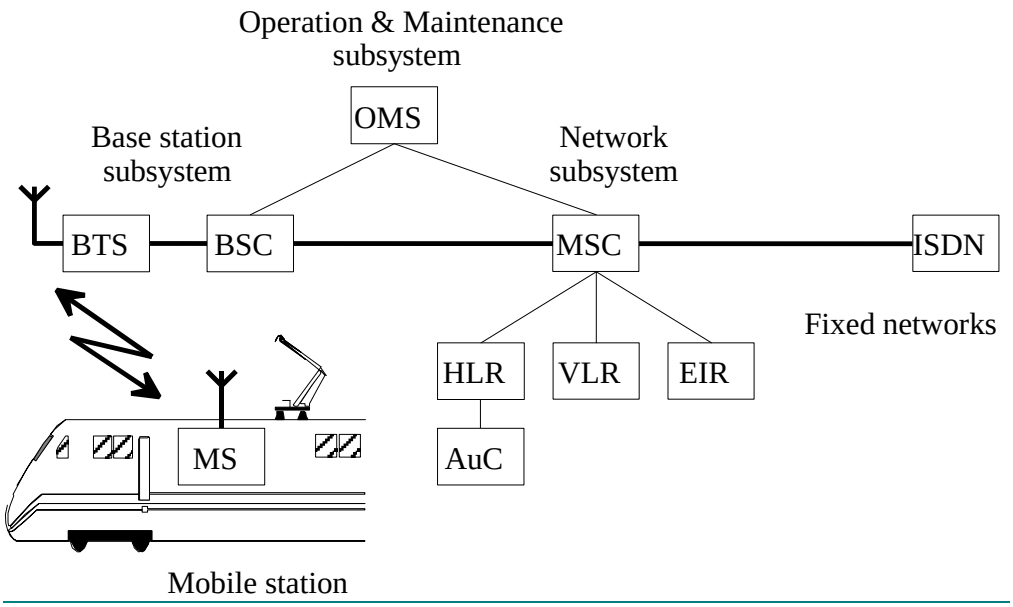

Figure A-2: Mobile network architecture

A.2.1. GSM-R Architecture

A.2.1.1 A GSM network has three main elements:

The Mobile Stations (MSs);

The Base Transceiver stations (BTSs) together with the base station controllers (BSCs);

The Mobile Switching Centres (MSCs).

A.2.1.2 An MSC controls one or more BSCs. Each BSC controls one or more BTSs. Each BTS controls one cell of the radio network.

A.2.1.3 The MSCs are connected to Home Location Registers (HLRs), which contain all the registration data of the PLMN subscribers. Each HLR is connected to an Authentication Centre (AuC), which contains the security-related information needed for the set-up and ciphering of the connections, in order to prevent unauthorised use of the network. Each MSC is also connected to a Visitor Location Register (VLR), which registers the movements of the Mobile Stations (MSs). As an option, MSCs can be connected to Equipment Identification Registers (EIRs). These EIRs enable the equipment to be identified, independently of the subscriber using it, in order to detect the use of stolen equipment.

A.2.1.4 The MSC and the Registers connected to it form the network subsystem (NSS). The MSC is connected, eventually through an ISDN transport network, to the ETCS trackside network.

A.2.2. GSM-R Terminals

A.2.2.1 The Mobile Terminals have to provide an interface to the EuroRadio module. (I)

A.2.2.2 A standardised interface has to be provided, in order to ensure the interworking of equipment from different manufacturers.

A.2.2.3 GSM 04.02 specifies the reference points to access the GSM PLMN services and the types of Mobile Terminals (MT0, MT1, MT2). The reference points are conceptual points which divide the functional groups.

A.2.2.4 The Mobile Termination MT0 means a fully integrated MS. This includes data terminal and adaptation functions which do not support external terminal interfaces. The use of MT0 is out of the scope of this specification and is left for further study.

A.2.2.5 The Mobile Termination MT1 complies with the GSM recommended subset of the ISDN user-network interface specifications. Bearing in mind the restricted channel capacity of GSM, the ability to support an ISDN interface would not offer any additional functionality. Furthermore, the control of the mobile equipment status and mobile network service (e.g. network selection) is not possible via an ISDN interface. For these reasons, MT1 is no longer considered within this specification.

A.2.2.6 The Mobile Termination MT2 has to provide an interface that complies with the GSM recommended subset of the ITU-T X or V series interface recommendations. It must provide an appropriate interface protocol to access the GSM PLMN signalling protocols.

A.2.2.7 The Mobile Termination MT2 can fulfil the requirements for an external interface to the EuroRadio equipment, so MT2 forms the basis of this specification for the EuroRadio / GSM PLMN interface (I_{GSM}).

A.2.3 On board architecture

A.2.3.1 Seamless RBC area change might require more than one Mobile Terminal. The interface specification applies to each individual Mobile Terminal. The application must therefore be responsible for the control of these terminals.

A.3. GSM-R Network Termination (NT1)

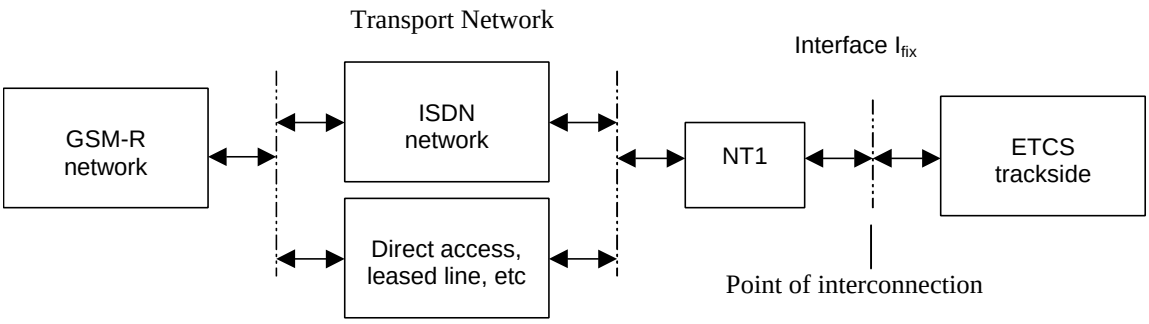

Figure A-3: Fixed side network termination

A.3.0 I_{FIX} is the interface between the GSM-R network terminated by NT1, including, if present, the transport network, and ETCS Trackside.
NT1 element includes functions which are broadly equivalent to the physical layer 1 of the OSI reference model. The functions are associated with the proper physical and electromagnetic termination of the network.

NT1 functions are:

- line transmission termination
- layer 1 line maintenance functions and performance monitoring
- timing
- layer 1 multiplexing
- interface termination, including multi-drop termination employing layer 1 contention resolution

A.3.1. ISDN Interface (I_{FIX})

A.3.1.1 The primary rate user-network interface (PRA interface) according to ETS 300 011 shall be provided.

A.3.1.2 Network terminations of type NT1 shall be supported.

A.3.1.3 Each PRA interface supports 30 B bearer channels and 1 D_{64} signalling channel. More than one PRA interface can be provided for availability reasons per trackside EuroRadio subsystem.

A.3.1.4 Basic rate access interface and access to PSTN are options not covered by this specification.

ANNEX B: FEATURES REQUIRED FOR ERTMS CLASS 1

B.1.1 This part of the specification is for information only.

B.1.2 Not all the GSM and EIRENE features specified in the above paragraphs are required for ERTMS Class 1 system definition.

B.1.3 The following features are not required:

1. CLIP and CoLP (GSM 02.81)
2. EIRENE Functional Addressing (USSD)
3. Calling and connected line presentation of functional identities (UUS1)