REFERENCE E 12 T 6001 5	
Company / organisation	**UIC ERTMS/GSM-R Operators Group** **GSM-R Industry Group**

FIS for Functional Addressing

ACCESS : ☑ Public ☐Restricted ☐Confidential

	NAME	**DATE**	**VISA**
Author	Morane	11 August 2000	
Revision	Nortel GSM-R IG	17 October 2006	M.Sauter GSM-R IG
Review	ERTMS/GSM-R Operators Group	29 January 2007	G.Porpora & D.Masur
Approval	ERTMS/GSM-R ERIG	29 January 2007	R.Sarfati

EVOLUTION SHEET

Version	Date	Author	MODIFICATION
A	30 Aug 1996	Italtel	Creation
B	18 Sept 1996	Italtel	Editorial changes and SMS usage added
1	25 Sept 1996	Italtel	First approved version
1A	4. July 1997	Siemens	Update Delete multiple Registration Change “procedure subaddressing”
2	25. July 1997	Siemens	Error messages Editorial changes
3	11 August 2000	WP 22 members	Specification update third issue
4	19 Sept. 2000	PMT	Correction of delimiter Specification update fourth issue
4.1	July 2006	Nortel	Updated to reflect CR’s resulting in EIRENE SRS 15 and SRS V7. CR O-9020, 9021, 9055, 9059, 9060, 9069
4.2	September 2006	Nortel	Updated with Bulk registration changes as requested by Operator Group
4.3	October 2006	Nortel	Updated with requested changes from OG review
5	29 January 2007	OG & IG	Specification update fifth issue

TABLE OF CONTENTS

1. FUNCTIONAL ADDRESSING 4

1.1 INTRODUCTION 4

2. REFERENCE DOCUMENTS 5

3. TERMINOLOGY AND ABBREVIATIONS 6

4. FOLLOW ME 10

4.1 INTERFACES BETWEEN NETWORK ELEMENTS 10

4.1.1 General 10

4.1.1.1 Processing the USSD request 10

4.2 MESSAGE DEFINITIONS AND CONTENTS 12

4.2.1 Format of the Register message from MS to NSS 12

4.2.2 Format of the Release Complete message from NSS to MS 13

4.2.2.1 Case 2 - Return Error TS GSM defined errors 15

4.2.2.2 Case 3 - Reject 15

4.2.3 MSC-HLR and HLR-FFN messages 16

4.2.3.1 Format of the message from HLR to FFN 16

4.2.3.2 Format of the message from FFN to HLR 16

4.2.3.2.1 Case 1 - Return Result 16

4.2.3.2.2 Case 2 - Return Error 17

4.2.3.2.3 Case 3 - Reject 17

4.2.4 Contents of USSD String 17

4.2.4.1 Messages MS-HLR (USSD String1) 17

4.2.4.2 Messages HLR-FFN (USSD String2) 20

4.2.4.3 Messages FFN-HLR (USSD String3) 21

4.2.4.4 Messages HLR-MS (USSD String4) 22

5. USAGE 23

5.1 INTERFACES BETWEEN NETWORK ELEMENTS 23

5.1.1 General 23

5.2 MESSAGES DEFINITIONS AND CONTENTS 23

5.2.1 MSC-FFN interface 23

5.2.2 MSC-MS interface 23

5.2.2.1 SA content on the Um/A-Interface 23

6. FORCED DEREGISTRATION NOTIFICATION 25

6.1 INTERFACES BETWEEN NETWORK ELEMENTS 25

6.1.1 General 25

6.1.1.1 Processing the USSD notification 25

6.1.1.2 Error treatment at FFN 26

6.1.1.3 Handling at the MS 26

6.2 MESSAGES DEFINITIONS AND CONTENTS 26

6.2.1 Contents of USSD String 26

6.2.1.1 Messages FFN - MS 26

6.2.1.2 USSD error response Message generated by MSC/VLR and HLR 28

6.2.1.3 response Messages MS - FFN 28

1. FUNCTIONAL ADDRESSING

1.1 Introduction

This document describes the interfaces and messages which are used to perform Functional Addressing registrations, deregistrations and other management activities by using the Follow Me (FM) Supplementary service.

Although standard USSD phase 2 messaging is used, it is necessary to specify the contents of the USSD messages that are exchanged between the network elements used by the Follow Me service.

The document is structured in two main sections: Follow Me Supplementary Service handling (Section 4) and usage of functional addressing during call handling (Section 5).

USSD messages used by the Follow Me service between Network Elements are presented in Section 4, which specifies the general format of the USSD messages and the contents of the USSD .

In addition, phase 2 network initiated USSD is also used to inform a subscriber of a forced deregistration. This is described in Section 6.

2. REFERENCE DOCUMENTS

[3] 3GPP TS 22.004 3.2.0 General on Supplementary Services.

[4] 3GPP TS 22.030 Man-Machine Interface (MMI) of the Mobile Station (MS). Version as referenced in [33] and [34].

[6] 3GPP TS 22.090 3.1.0 Unstructured supplementary services operation – Stage 1.

[11] 3GPP TS 23.090 3.1.0 Unstructured Supplementary Service Data (USSD) – Stage 2.

[12] 3GPP TS 24.002 v3.0.0 Digital cellular telecommunications system (Phase 2+);GSM Public Land Mobile Network (PLMN)access reference configuration.

[14] 3GPP TS 24.008 3.3.0 Mobile radio interface layer 3 specification, Core Network Protocols - Stage 3.

[16] 3GPP TS 24.080 3.2.0 Mobile radio Layer 3 Supplementary Service specification – Formats and coding

[19] 3GPP TS 29.002 Mobile Application Part (MAP). Version as referenced in [33] and [34].

[21] MORANE Sub-System Requirements Specification, A 04/02 T 6002

[22] MORANE Form Fit Functional Specification for Functional Addressing E 10 T 6001

[28] 3GPP TS 22.094 v6.0.0 Follow Me – Stage 1.

[29] 3GPP TS 23.094 v6.0.0 Follow Me – Stage 2.

[30] Usage of the UUIE in the GSM-R environment, MORANE Ref.:H22T0001

[31] 3GPP TS 29.007v3.4.0 1 General on terminal adaption function (TAF) for mobile station (MS)

[32] 3GPP TS 27.001v3.4.00 General requirements and interworking between the PLMN and the ISDN

[35] EIRENE, System Requirements Specification, version 15

Informative References

[33] ETSI EN 301 515 v2.3.0, “Global System for Mobile Communication (GSM); Requirements for GSM operation on railways

[34] ETSI TR 102 281 v2.0.0, “Detailed requirements for GSM operation on Railways”

3. TERMINOLOGY AND ABBREVIATIONS

BC	Bearer Capability
BSS	Base Station System
CT	Call Type
DSD	Driver Safety Device
E.164	CCITT Recommendation (Numbering plan for the ISDN era)
EIRENE	European Integrated Railway Radio Enhanced Network
ETCS	European Train Control System
FC	Function Code
FMm	Application that performs Follow Me Service on HLR
FMf	Application that performs Follow Me Service on FFN
GSM	Global System for Mobile Communications
GSM-R	GSM Railway
GMSC	Gateway MSC
FFN	Follow Me Functional Node -
HLR	Home Location Register
IAM	Initial Address Message
IC	International Code
ID	Identity
IEI	Information Element Identifier
IMSI	International Mobile Subscriber Identity
ISDN	Integrated Services Digital Network
ISUP	ISDN User Part
MAP	Mobile Application Part
MS	Mobile Station
MSC	Mobile Switching Centre
MSISDN	Mobile Station International ISDN Number
MSRN	Mobile Station Roaming Number
ODD	Originally Dialled Digits
RN	Railway Network
RSN	Railway Subscriber Number
SA	SubAddress
SC	Service Code
SI	Supplementary Information
SS	Supplementary Service

UIC	Union International des Chemins de Fer
UIN	User Identifier Number
USSD	Unstructured Supplementary Service Data
VLR	Visitor Location Register
VMSC	Visited MSC

Abbreviations used in the specification are listed in GSM 01.04.

According to SSRS [21], the following terminology is used :

- **telephone_number** (TN): a number that can be employed by users of a telecommunication network to route calls to a specific user/function.
- **MSISDN**: the telephone_number used in GSM Network. The MSISDN's are stored in HLR. There could be several HLR in EIRENE network and each MSISDN is stored in one of them.
- **functional_address** (FA): is an alphanumeric address that identifies an end user/function.
- **functional_number** (FN): the full number used within the functional numbering scheme to identify an end user or system by function or role rather than by a specific item of radio equipment or user subscription. The functional_number is also referred to as a *dummy* or *virtual* number and shall **not** contain alphabetical characters. Functional_numbers are stored in one FFN and they identify *dummy* users having their own *dummy* profiles. There is no restriction in having within the same physical HLR both MSISDN and functional_numbers, i.e. the HLR and FFN are colocated.

  The association of functional_numbers to MSISDN is done through the Registration Operation and is removed through the Deregistration Operation. These operations are normally under subscriber and operator control and are to be repeated whenever the association is to be modified.

  At usage time a translation is to be performed call by call from functional to mobile "true" number.

  If the functional_address does not contain alphabetical characters, the functional_address is equal to the functional_number. Otherwise it shall be translated into a functional_number before using it as a telephone_number.

- **functional_number_type** (FNT): a 1 digit number indicating the type of the functional_number.
- **train_number** (TN): a 1 to 8 digit identity given to a train by operational staff for a particular journey.
- **on_train_function_code** (TFC): a 2 digit number that identifies unequivocally a function or a user on train.
- **train_functional_number** (TFN): a functional_number identifying unequivocally a user/function on a given train. It is made by:

functional_number_type + train_number + on_train_function_code.

- **stock_number** (SN): an identity assigned to an item of rolling or traction stock on a permanent basis. According to Leaflet UIC 438-1, is up to 12 digits long.
- **engine_number** (EN): a unique number given to a tractive unit to identify it permanently. The UIC has introduced a uniform identification marking system for tractive stock crossing frontiers [UIC 438-3]. In order to call a particular locomotive, it shall be possible to call a number associated with the tractive unit's stock number. The actual number of the unit, which shall be used as the EN, is based on the complete identification number. [35].
- **on_engine_function_code** (EFC): a 2 digit number that identifies unequivocally a function or a user on engine.
- **engine_functional_number** (EFN): a Functional Number identifying unequivocally a user/function on an engine. It is made by:

  functional_number_type + engine_number + on_engine_function_code.

- **maintenance_services_functional_number** (MSFN): is a Functional Number identifying unequivocally a maintenance services personnel. It is made up of the following:

  Functional Number Type + working Location +Team type + Member identity + Team number.

- **coach_number** (CN): a unique number given to a coach (which is not a tractive unit) to identify it permanently. The UIC has introduced a uniform identification marking for passenger rolling stock [UIC 438-1]. In order to call a particular coach it shall be possible to call a number associated with the vehicle marking. The total vehicle marking consists of 12 digits.
- **on_coach_function_code (CFC):** a 2 digit number that identifies unequivocally a function or a user on a coach.
- **coach_functional_number (CFN):** a Functional Number identifying unequivocally a user/function on a coach. It is made up of the following:

  functional_number_type + coach_number + on_coach_function_code

For convenience, in the rest of this document two new definitions - ***root*** and ***branch*** - will be used with different meanings according to the functional_number_type:

functional_number_type	*root*	*branch(s)*
train_functional_number	train_number	on_train_function_code(s)
maintenance_service_functional_number	working_location + team type + member identity	team number
engine_functional_number	engine_number	on_engine_function_code
coach_functional_number	coach_number	on_coach_function_code

Table 1

- **Functional_number_group** (FNG): A list of functional numbers where every item has the same root.
- a**ddressing_reference_functional_number** (ARFN): An item used as addressing parameter in HLR-HLR MAP messages
- **Follow Me Function Node:** network node in the PLMN of the remote party. It is the node where the FM data of the remote party is handled. This can be implemented in the HLR or any other operator specific network nodes (such as a SCP)
- **Home Location Register**: node in which "mobile" numbers of the mobile terminals ("true" MSISDN's) are stored. The HLR node may also be used as the platform on which the Follow Me Function Node may be implemented.
- **FM service supervisor**: the mobile subscribers who are allowed to modify the Follow Me data of the remote party (FN) who has been registered to another initiating subscriber for the Follow Me application. The FM service supervisors shall be authorised by the network operator.
- **FMm**: the function that checks Follow Me subscription Class of Registration during the Follow Me procedures on the HLR.
- **FMf**: the function that forwards the functional number to an MSISDN on the FFN.

4. FOLLOW ME

4.1 Interfaces between Network Elements

4.1.1 General

Follow Me is a PLMN specific supplementary service and is based on USSD. All the messages between MS and NSS and internal to NSS are USSD messages. FM is an USSD application that acts as CFU and USSD is used to carry the information needed by the FM application through the network. The phase of the GSM protocol used is “2”.

The Unstructured Supplementary Service Data (USSD) mechanism allows the MS user and a PLMN operator defined application to communicate in a way that is transparent to the MS and to intermediate network entities. The mechanism allows development of PLMN specific supplementary services. The following diagram shows how handling of USSD is carried out in the case of Follow Me. The functionality of Follow Me is split on HLR (FMm) and on FFN (FMf).

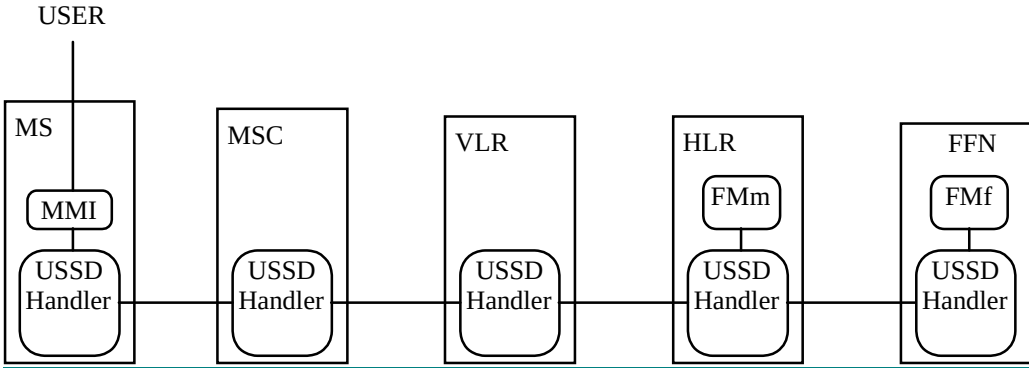

Fig. 1 USSD handling for Follow Me.

The MMI for USSD is specified in [4].

All USSD messages (requests and responses), contain the USSD string, an alphabet indicator and language indicator, as defined in [3].

All the information relevant to Follow Me service is contained in the USSD String.

Scope of this document is to define the contents of USSD String in the messages between the different Network Elements.

4.1.1.1 Processing the USSD request

HLR and FFN have to process the USSD request locally, so the request shall be handled by an appropriate application. The location, nature and contents of USSD applications are, by definition, service provider and network operator dependent. For the FM service, the application on the HLR shall pass a different USSD request to another network entity.

Upon completion of handling the request, the network entity shall respond to the request and release the transaction.

According to these assumptions, the following figure shows the flow of USSD messages for Follow Me service.

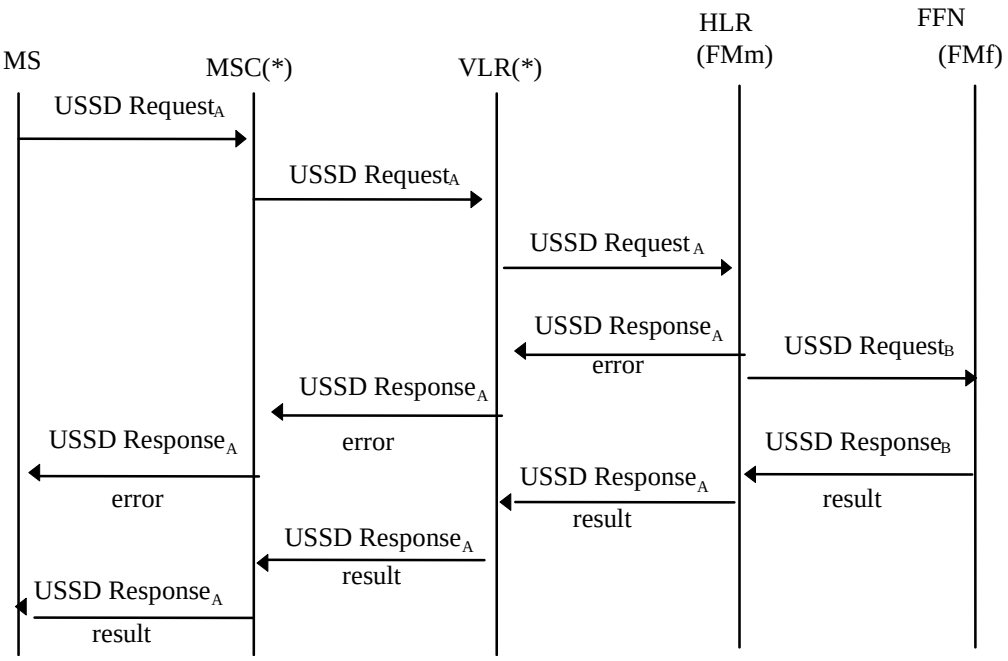

Fig. 2: Information flow for mobile initiated USSD Request containing FM related operations

(*) MSC and VLR are passing the message in a transparent way.

USSD Request$_B$ is built by information contained in USSD Request$_A$ and information stored in the HLR user profile. While the USSD string remains the same, Request$_B$ additionally contains the MSISDN of the subscriber as part of the MAP message as described in chapter 4.2.1 in [28].

The Network Elements that change the contents of USSD String during Follow Me service are shown in Fig. 3.

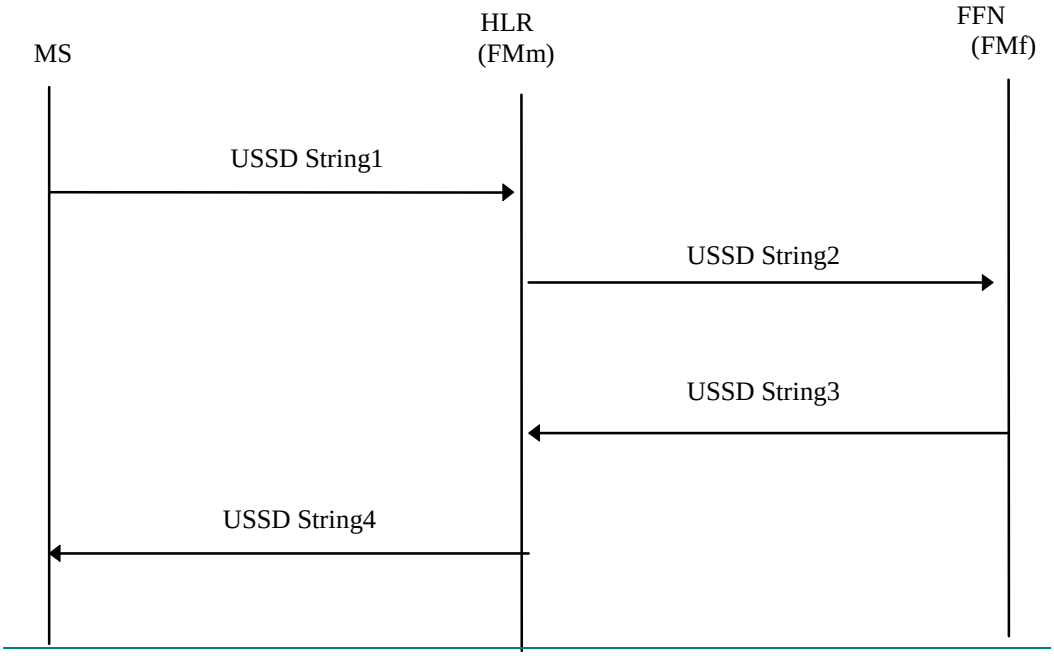

Fig. 3: Changes of contents of USSD Strings

Figure 4 shows the interface between MS and Network

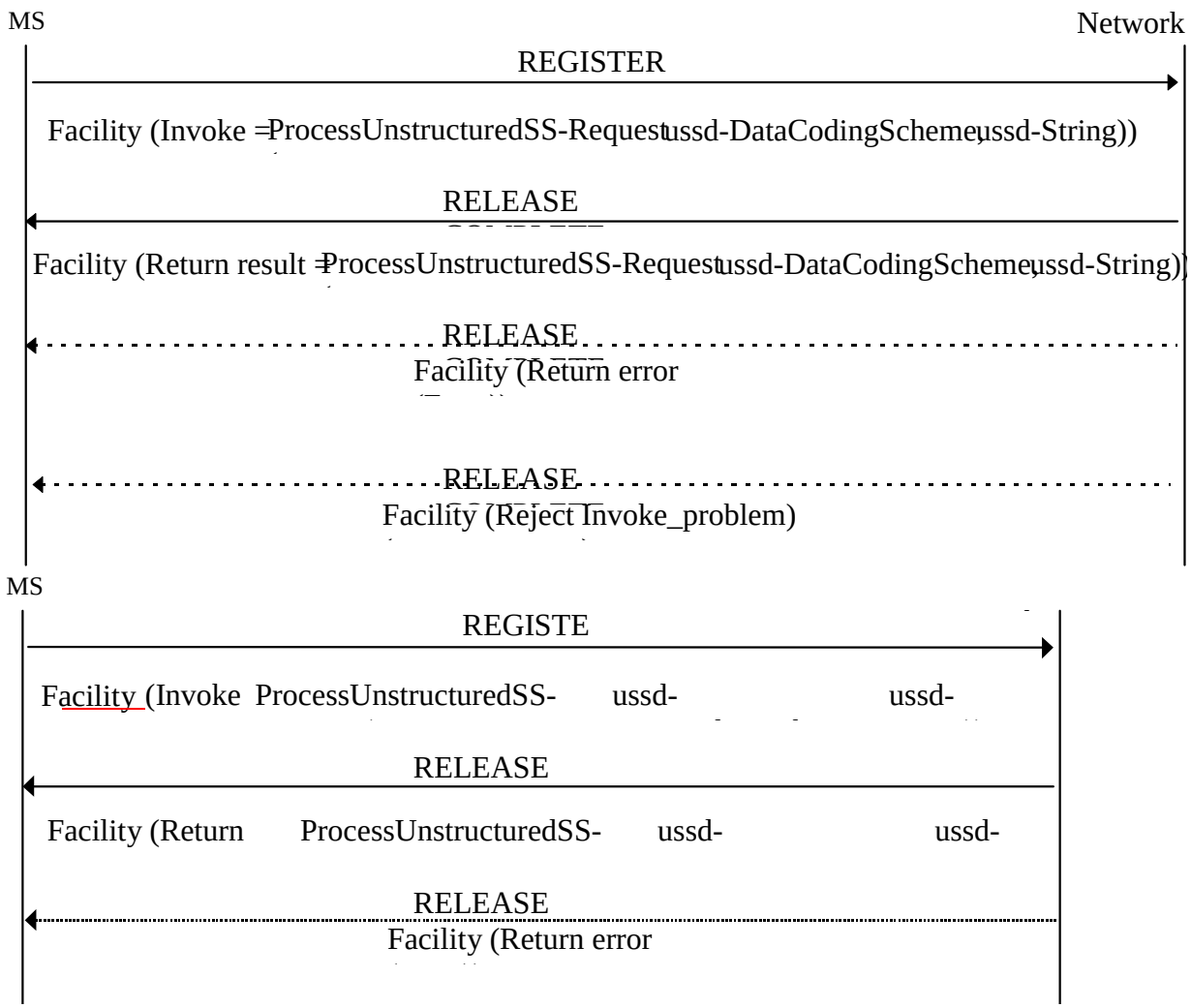

Fig. 4: Mobile initiated USSD operation, network does not request further information

NOTE: The mobile station may clear the transaction at any time by sending a RELEASE COMPLETE upon request of the user.

4.2 Message definitions and contents

In the following subsections message structures are defined. As explained the message is made by a standard part and a user definable string. This string is defined as the *USSD String.*

4.2.1 Format of the Register message from MS to NSS

In the following picture the format of a USSD-Register message from MS to NSS is shown.

This format is standard. The format, coding and use of messages are explained in [16].

The notation 0x before a number means hexadecimal.

T.I. | S.S. P.D.	**Transaction Identifier (Variable) - S.S Protocol Discriminator = 0xB**
Message Type	**Register = 0x7B**
IEI	**Facility = 0x1C**
Length of IEI	**Variable** (indicate the length from next field to the next IEI)
Component Type Tag	**Invoke = 0xA1**
Component Length	**Variable** (is equal to Length of IEI - 2)
Component ID Tag	**Invoke ID Tag = 0x02**
Component ID Length	**= 0x01**
Component ID	**Invoke ID** (from 0x00 to 0xFF)
Operation Code Tag	**= 0x02**
Operation Code Length	**= 0x01**
Operation Code	**ProcessUnstructuredSS-Request = 0x3B**
USSD Data Coding Scheme	**Alphabet Indicator (SMS Default Alphabet) and Language Indicator (Language Unspecified) = 0x0F**
USSD String1	**Message including Procedure Type Identifier, SI with separators.** **It may be typed on MMI by user or produced by specific mobile application** **Length up to 160 bytes.**
IEI	**SS Version = 0x7F**
Length of IEI	**= 0x01**
Component	**SS Version Indicator = 0x00**

The Component ID (Invoke ID), USSD Data Coding Scheme and USSD String1 are transported unchanged by a MAP message up to HLR.

4.2.2 Format of the Release Complete message from NSS to MS

These are the possible formats of a USSD-Release Complete message from NSS to MS.

Case 1 - Return Result. This message is used in case of successful result of the procedure or in case of Follow Me specific errors which are not defined in [19]. The format is standard (for more information see [16]).

T.I. | S.S. P.D.	**Transaction Identifier - S.S Protocol Discriminator = 0xB**
Message Type	**Release Complete = 0x2A**
IEI	**Facility = 0x1C**
Length of IEI	**Variable** (indicate the length from next field to the end)
Component Type Tag	**Return Result = 0xA2**
Component Length	**Variable** (is equal to Length of IEI - 2)
Component ID Tag	**Invoke ID Tag = 0x02**
Component ID Length	**= 0x01**
Component ID	**Invoke ID = Invoke ID of the relevant Facility Message**
Sequence Tag	**= 0x30**
Sequence Length	**Variable** (indicate the length from next field to the end)
Operation Code Tag	**= 0x02**
Operation Code Length	**= 0x01**
Operation Code	**ProcessUnstructuredSS-Request = 0x3B**
USSD Data Coding Scheme	**Alphabet Indicator (SMS Default Alphabet) and Language Indicator (Language Unspecified) = 0x0F**
USSD String4	**Length up to 80 bytes.**

The Component ID (Invoke ID), USSD Data Coding Scheme and USSD String4 are transported unchanged by MAP message up to MS.

The MS shall display the content of the USSD String4.

4.2.2.1 Case 2 - Return Error TS GSM defined errors

This message is used in case of an unsuccessful result of the procedure due to a protocol error. The standard format is used (for more information see [16]).

T.I. | S.S. P.D.	**Transaction Identifier - S.S Protocol Discriminator = 0xB**
Message Type	**Release Complete = 0x2A**
IEI	**Facility = 0x1C**
Length of IEI	**Variable**
Component Type Tag	**Return Error = 0xA3**
Component Length	**Variable**
Component ID Tag	**Invoke ID Tag = 0x02**
Component ID Length	**= 0x01**
Component ID	**Invoke ID = Invoke ID of FaciliyMessage**
Error Code Tag	**= 0x02**
Error Code Length	**= 0x01**
Error Code	**reference TS-GSM 04.80**
Optional Parameters	**Depending on Error Code**

The MS shall display the Error Codes and, if possible, a brief explanation of the nature of the error.

4.2.2.2 Case 3 - Reject

This message is used in case of an error generated by the transfer protocol. The format is standard (for more information see [16]).

T.I. | S.S. P.D.	**Transaction Identifier - S.S Protocol Discriminator = 0xB**
Message Type	**Release Complete = 0x2A**
IEI	**Facility = 0x1C**
Length of IEI	**Variable** (0x08 in this case)
Component Type Tag	**Reject = 0xA4**
Component Length	**Variable** (0x06 in this case)
Component ID Tag	**Invoke ID Tag = 0x02**
Component ID Length	**= 0x01**
Component ID	**Invoke ID = Invoke ID of FacilityMessage**
Problem Code Tag	**Invoke_problem = 0x81**

Problem Code Length	**= 0x01**
Problem Code	**reference TS-GSM 04.80**

Exhaustive explanation and definition of Problem codes is given in CCITT Recommendations Q.771, Q.772, Q.773, Q.774.

The MS shall display the Problem Code and, if possible, a brief explanation of the nature of the error.

4.2.3 MSC-HLR and HLR-FFN messages

For MSC-HLR and HLR-FFN dialogue the MAP protocol is used (see [19]).

4.2.3.1 Format of the message from HLR to FFN

According to [19] MAP services transfer operation.

In the following table the content of MAP ProcessUnstructuredSS-Request from HLR to FFN is shown. The operation is part of a MAP OPEN service.

Component ID	**Invoke ID** (from 0x00 to 0xFF)
USSD Data Coding Scheme	**Alphabet Indicator (SMS Default Alphabet) and Language Indicator (Language Unspecified) = 0x0F**
USSD String2	**Length up to 160 bytes.**

4.2.3.2 Format of the message from FFN to HLR

In the following tables the content of MAP ProcessUnstructuredSS-Response from FFN to HLR is shown. The operation is part of a MAP CLOSE service.

4.2.3.2.1 Case 1 - Return Result

This message is used in case of successful result or in case of Follow Me specific errors which are not defined in [19] (see 4.2.2.3). The format is standard (for more information see [16]):

Component ID	**Invoke ID = Invoke ID of the relevant Register Message**
USSD Data Coding Scheme	**Alphabet Indicator (SMS Default Alphabet) and Language Indicator (Language Unspecified) = 0x0F**
USSD String3	**Length up to 80 bytes.**

4.2.3.2.2 Case 2 - Return Error

This message is used in case of unsuccessful result of the procedure due to protocol error. The format is standard (for more information see [16]). For error codes see section 4.2.2.1.

Component ID	**Invoke ID = Invoke ID of Register Message**
Error Code	**see 4.2.2.1**
Optional Parameters	**Depending on Error Code**

4.2.3.2.3 Case 3 - Reject

This message is used in case of an error generated by the transfer protocol. The format is standard (for more information see [16]). For error codes see section 4.2.2.2.

Component ID	**Invoke ID = Invoke ID of Register Message**
Problem Code	**see 4.2.2.2**

4.2.4 Contents of USSD String

4.2.4.1 Messages MS-HLR (USSD String1)

According to SSRS and [6], the content of USSD string1 from MS to NSS shall be:

- two (or 3) characters of the set (*,#) to define the type of Follow Me service (procedure type identifier)
- the SC for the Follow Me service (214)
- the * character
- followed by a Supplementary Information (SI) (See below)
- the # character to end.

The SMS Default Alphabet is used (1 character = 7 bits).

So for the Follow Me procedures the contents shall be :

- Follow Me Registration: **214*FN***#

- Follow Me Deregistration: ##214*FN***#

- Forced Deregistration: ##214*FN*88*MSISDN*#

- Follow Me Interrogation: *#214*FN***#

Where the following table describes all fields:

The *Functional-Number* (FN) shall be in the following format.

FN = IC + RSN = IC + FUNCTIONAL NUMBER TYPE + *ROOT* + *BRANCH*

Note : The On_Train_Function_Code shall not contain alphabetical characters. It is represented by the branch.

Parameter number	Value	Parameter mandatory (M) or optional (O)	Comment
1	OC	M	Operation Code: OC = ** ... for Registration OC = ## ... for Erasure OC = *# ... for Interrogation
2	SC	M	Service Code for Follow Me.
3	*	M	Delimiter
4	Functional Number (called REMOTE NUMBER in ETSI FM specs)	M	Functional Number
5	*	M	Delimiter
6	Supervisor Indicator	C	Supervisor indicator mandatory for forced deregistration, e.g. 88.
7	*	M	Delimiter
8	MSISDN to erase	C	‘MSISDN to erase’ mandatory for forced deregistration
9	*	M	Delimiter

10	Additional information field	O	BULK_TAG (*)	Text tag indicating a bulk operation. Required to ensure/identify the special information contained in the Additional Information field of the USSD string. For Bulk operations, the identifier is 'BULK'. For a Bulk operation the FC in parameter 4 (REMOTE NUMBER) has to be 01. Bulk operations are only supported for registration and normal deregistration (not forced deregistration or interrogation)
			NUM_FC	Single digit specifying number of FCs to follow, maximum is 9, can be 0. A space character (0x20) has to be added as delimiter to the next field. Delimiter is omitted if number of FCs is 0.
			FC_LIST	List of two-digit Function Codes. Can be empty if length is 0. Cannot include 01 since it is already sent in the lead_fn field (parameter 04). No delimiters between the different function codes are used. Example for number of FC's = 4: '02030708'. The list must not contain FC=01
Last	#	M	End of USSD string	

(*) Bulk registration is an option that enables a lead driver to register/deregister multiple function codes within one USSD request. Bulk registration allows the network as an option to override the FC list requested and provide a different FC list. If this option is implemented in the network it is not even necessary for the cab radio to provide a FC list (0 entries). For more details refer to the FFFS for functional addressing.

4.2.4.2 Messages HLR-FFN (USSD String2)

For FM operations between HLR and FFN a USSD String2 is composed by FMm. The USSD String2 is contained in the MAP OPEN service message.

All the parameters are encoded according [19]. The content of USSD string2 from HLR to FFN shall be the same format as for USSD String 1.

4.2.4.3 Messages FFN-HLR (USSD String3)

For FM operations between FFN and HLR a USSD String3 is composed by FMf.

The SMS Default Alphabet is used.The USSD String3 is contained in the MAP ACCEPT service.

All the parameters are encoded according [19]. The content of USSD string3 from FFN to HLR shall be as follows:

Parameter	Type	Length in characters
Outcome code	**Mandatory 1)**	**2**
Separating character (space) (0x20)	**Optional**	**1**
USSD-Response	**Optional 2)**	**N**

1) Ref [29] for the outcome codes and their corresponding USSD responses. The outcome codes can be either a successful response to a USSD request or an unsuccessful response due to a Follow Me .

For Bulk registration the outcome code is 11 and for Bulk deregistration the outcome code is 12. For Bulk operations outcome codes 41 and 61 to 64 are not used.

In case of protocol error at the FFN, the response will be a normal MAP error message and no USSD string3 will be used, refer to FFFS for Functional Addressing for more details.

2) The USSD response can contain one of the following additional parameters:

- If the message is a response for a successful interrogation, the served MSISDN is placed in the USSD-Response.
- For a *Bulk operation* the USSD-Response to Bulk registration or Bulk deregistration requests has the following format;

  <NUM_SFC><FC_SLIST><NUM_UFC><FC_ULIST>

  With the following fields:

  - NUM_SFC Number of successfully registered/deregistered FCs. A space character (0x20) is used as a delimiter to the next field.
  - FC_SLIST list of successfully registered/deregistered FCs - may include FC 01. A space character (0x20) is used as a delimiter to the next field if the list is not empty.
  - NUM_UFC Number of unsuccessfully registered/deregistered FCs. A space character (0x20) is used as a delimiter to the next field. The delimiter is omitted if the following list is empty.
  - FC_ULIST list of unsuccessfully registered/deregistered FCs - may include FC 01

Note that the list of FC registered may be different from the list of FC requested in the original request.

If no registration/deregistration was successful or unsuccessful the respective counter is set to 0 and the corresponding list is empty.

4.2.4.4 Messages HLR-MS (USSD String4)

The USSD String4 in the messages HLR-MS is identical to the format of the USSD String3.

The SMS Default Alphabet is used.

String4 may be directly displayed by the MS if some text message is already included in the USSD-Response field. Otherwise the MS translates the outcome code into some text message to display, allowing therefore the MS to choose the appropriate language for the user.

Parameter	Type	Length in characters
Outcome code	**Mandatory 1)**	**2**
Separating character (space) (0x20)	**Optional**	**1**
USSD-Response	**Optional 2)**	**N**

1) Ref table B.2 in [29] for the outcome codes and their corresponding USSD responses. The outcome codes can be either a successful response to a USSD request or an unsuccessful response due to a Follow Me error as described in [29]. The outcome code in string4 is the same as in string3.

For Bulk registration the outcome code is 11 and for Bulk deregistration the outcome code is 12. For Bulk operations outcome codes 41 and 61 to 64 are not used.

In case of a protocol error at the HLR, the response will be a normal MAP error message and no USSD string4 will be used. Please refer to FFFS for Functional Addressing for more details. If a MAP error that occurred at the FFN is received at the HLR, it will be passed on to the MS by the HLR and no string4 will be used either in this case.

2) The USSD response can contain one of the following additional parameters:

- If the message is a response to a successful interrogation the served MSISDN is placed in the USSD-Response by the FFN. The HLR will pass on transparently to the MS the content of string3 in string4.
- For the format of this parameter for responses to Bulk operations see 4.2.4.3

5. USAGE

5.1 Interfaces between Network Elements

5.1.1 General

Functional Addressing is used in the Mobile Terminating Call (MTC) scenario.

All the interfaces are used in a standard way, i.e. no interface modification is needed and standard GSM call handling procedures are used.

Refer to the relevant TS GSMs ([19], [31], [14]) for a complete description of all the interfaces.

5.2 Messages definitions and contents

5.2.1 MSC-FFN interface

The standard GSM is used, for the message flow, see Fig. 10 of [22]

The „originally dialled digits“ (ODD) are delivered transparently throughout all the interfaces down to the VMSC within the ISUP IAM.

5.2.2 MSC-MS interface

Standard GSM Call Handling messages are used. As defined in SSRS and FFFS on Functional Addressing, if necessary the MSC has to generate the Bearer Capability Information Element (BC). No special coding is required for the BC. Refer to TS GSM [14] and [32] for BC layout. For details of the content of the UUS message reference [30] MORANE Usage of the UUIE in the GSM-R environment.

5.2.2.1 SA content on the Um/A-Interface

The SA in the IAM refers to the *branch* used for the FM service. The SA is derived from the last two digits of the received originally dialled digits (ODD). It is used to represent ISDN-subaddress. SA is only applicable for CT 2, 3 and 4. The content of the parameter is in accordance to CCITT Recommendation X.213 and is displayed in the next table:

octet	8	7	6	5	4	3	2	1
1	ext	type of subaddress NSAP			odd/even ind	not used		
	1	0	0	0	non sign	0	0	0
2	AFI = Local/DSP decimal							
	0	1	0	0	1	0	0	0
3	Digits in BCD							
	DGT 2				DGT 1			

Table 2

DGT1 and DGT2 corresponding to digits in Table 2 Par. 5.6.2 “Function Checking” in the FFFS on Functional Addressing document. In particular DGT1 is the left hand digit and DGT2 is the right hand digit.

6. FORCED DEREGISTRATION NOTIFICATION

6.1 Interfaces between Network Elements

6.1.1 General

If a subscriber is forced de-registered by another subscriber a network initiated USSD notification is generated at FFN and sent to the forced de-registered subscriber (Involved entities see figure 1).

All USSD messages used for the purpose of the forced de-registration notification are Phase 2 USSD messages [3]. The USSD string contains the de-registered functional number.

Scope of this document is to define the contents of USSD string in the messages between the different Network Elements.

Bulk operations are not valid for Forced deregistration.

6.1.1.1 Processing the USSD notification

If a forced de-registration is performed at FFN, the FFN shall generate an USSD notification message to the HLR of the de-registered subscriber. The HLR shall forward the USSD notification to VLR [11], [12].

Upon completion of handling the MS will respond an empty response.

According to these assumptions, the following figure shows the flow of USSD messages for forced de-registration notification.

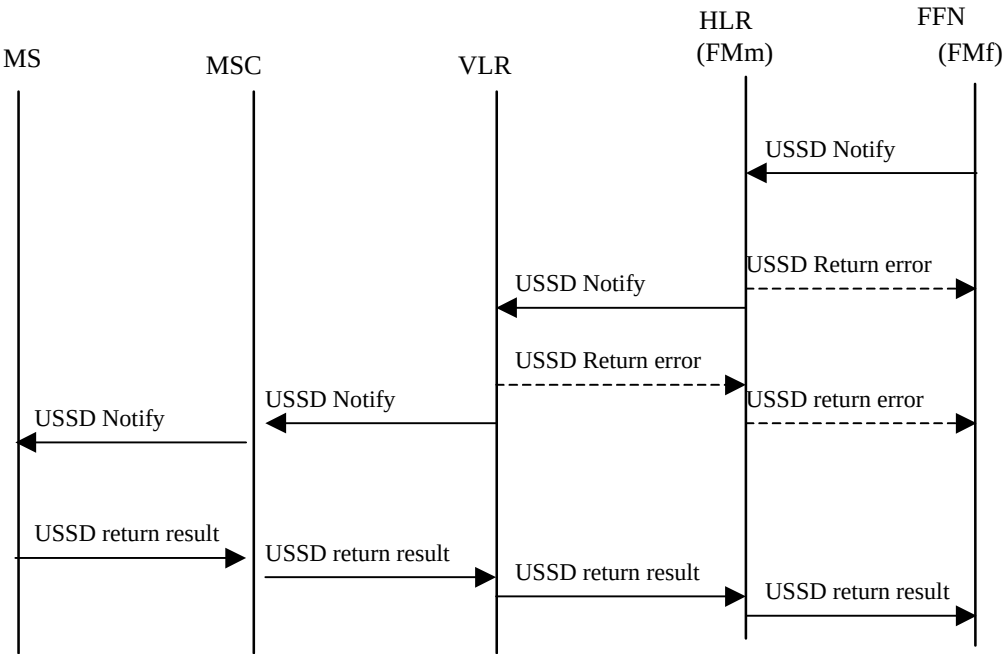

Fig. 2: Information flow for network initiated USSD Request containing deregistered functional number

6.1.1.2 Error treatment at FFN

If the FFN receives an error response message that the USSD message could not be transferred to the MS, it shall repeat the USSD message after a predefined time.

The FFN shall not repeat the USSD in case of the following error returns:

- Unknown subscriber,
- Illegal Subscriber,
- Illegal equipment
- Not supported service

In all other cases (see MAP specification [19] 11.11.3**)** the FFN shall start a timer. The length of the timer is defined by operator in the range of 1 –10 minutes. On timer expiry it shall send the message again. The FFN shall repeat the messages up to 5 times.

6.1.1.3 Handling at the MS

If the MS receives a USSD Notify message, it is transferred to the application program. The application program shall then check the service code, return an empty response message and start an interrogation procedure using the functional number from received message.

- In case of a Cab Radio the MS shall interrogate all of the FN stored on the SIM belonging to the same ROOT (train number, ref. chapter 3, table 1).
- All other MS shall interrogate the complete set of FN's stored on the SIM.

The MS shall use the information which was retrieved by the interrogation procedure to update the table of functional numbers on the SIM.

6.2 Messages definitions and contents

In the following subsections message structures are defined. As explained the message is made by a standard part and a user definable string. This string is defined as the *USSD String.*

6.2.1 Contents of USSD String

6.2.1.1 Messages FFN - MS

The Alphabet indicator is set to "SMS Default Alphabet" and the language indicator is set to "language unspecified"

Contents of USSD string

- Operation Code
- the * character
- the SC for the Follow Me service (214,ref. to 3GPP 22.030)
- the * character
- forced de-registered functional number
- the * character
- Supervisor Indicator = 88
- the * character
- MSISDN of the subscriber that initiated the forced de-registration request
- the * character

Optional addition information for operator specific use

- the # character to end.

Where the following table describes all fields:

The *Functional-Number* (FN) shall be in the following format.

FN = IC + RSN = IC + FUNCTIONAL NUMBER TYPE + *ROOT* + *BRANCH*

Note: The On_Train_Function_Code shall not contain alphabetical characters. It is represented by the branch.

Parameter number	Value	Parameter mandatory (M) or optional (O)	Comment
1	OC	M	Operation Code: OC = ## ... for Erasure (OC = ** ... reserved for future use)
2	*	M	Delimiter
3	SC	M	Service Code for Follow Me (ref. 3GPP 22.030). Notifying the application program on MS that the message corresponds to FM
4	*	M	Delimiter
5	Functional Number (forced de-registered number)	M	Functional Number
6	*	M	Delimiter

7	Supervisor indicator	M	Supervisor Indicator = 88
8	*	M	Delimiter
9	MSISDN	M	MSISDN of subscriber that initiated the forced de-registration request. Left blank if initiated by an administrative terminal connected to the FFN.
10	*	M	Delimiter
11	Additional information field	O	For operator specific use
Last	#	M	End of USSD string

The USSD Notify is send with message register from MSC to MS according [16].

6.2.1.2 USSD error response Message generated by MSC/VLR and HLR

This messages are according MAP protocol [19]

6.2.1.3 response Messages MS - FFN

This message is used to response that the notification message is received at MS. It is code according ‘SS formats and coding ‘[16], ‘MAP protocol’ [19]

Component ID	**Invoke ID = Invoke ID of Register Message**
error Code	**see MAP specification [17] 11.11.3**